SIGMA
Designer Faucetry

TechData
SPECIFICATIONS
Kitchen & Bar

Pillar Kitchen with Soap Dish
and Handspray
1.3576032
Waldorf Handle

(Ceramic Lever)

FEATURES:

- All brass construction
- Porcelain soap dish and handle insert
- Available in all Sigma finishes
- Maximum deck thickness: 2-1/4”
- Replacement cartridges: 18.30.029-cold, 18.30.030-hot
- Measurements vary according to handle choice
- Custom option: High-arc extended swivel spout, 11” center-center, 14” overall height
- Meets: ASME A112.18.1-2005/CSAB125.1-2005

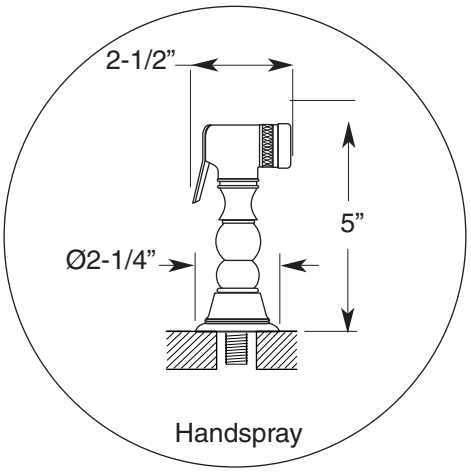

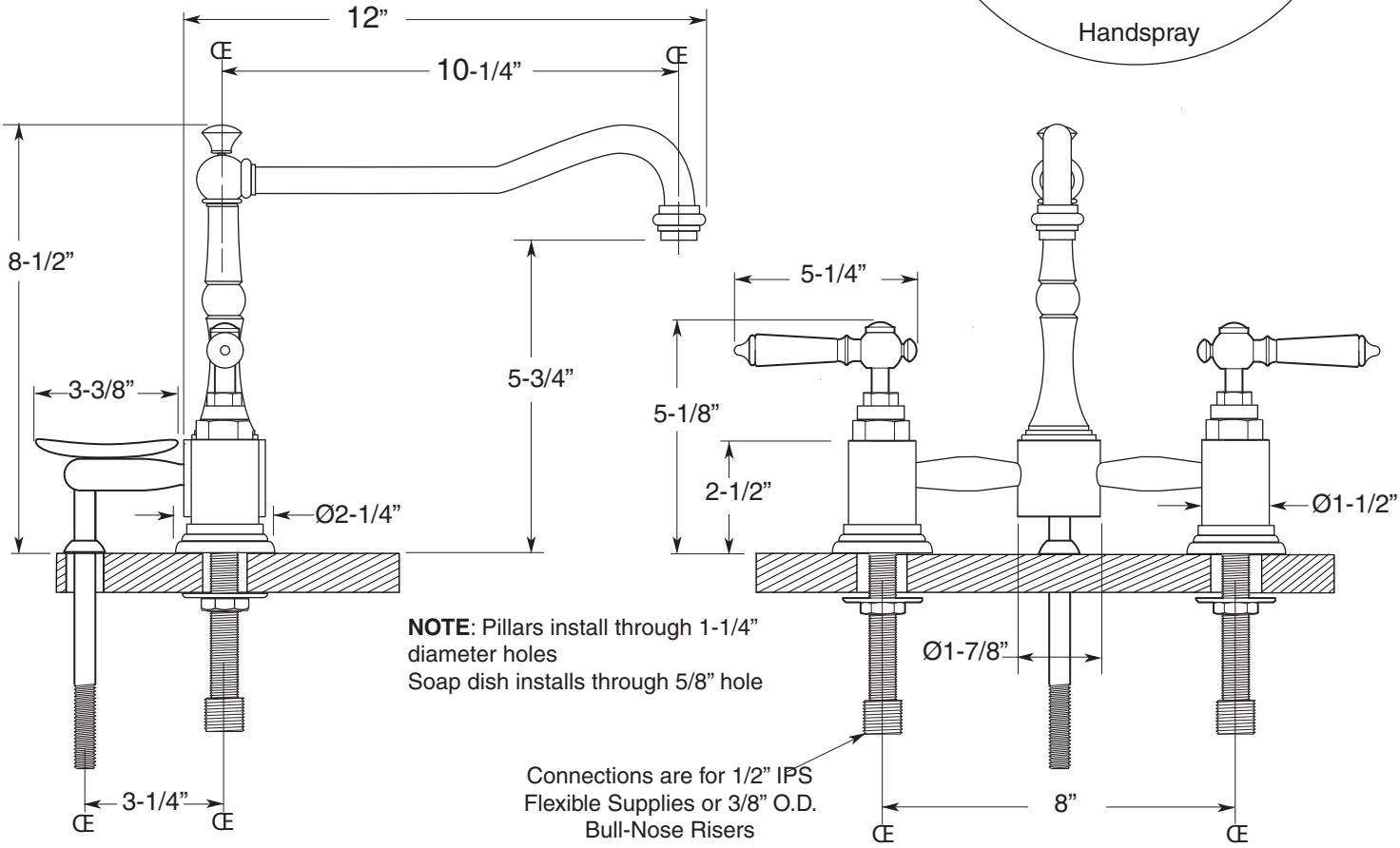

Note: Measurements are subject to change or cancellation. No responsibility is assumed for use of superseded or voided pages.