SIGMA
Designer Faucetry

TechData

Specifications

Series 1800

Waldorf
Roman Tub Set with Deckmount
Handshower and Diverter
1.187693
(1.187693T - Trim only)

FEATURES:

- All brass construction.
- Lever with ceramic insert handles with top screw attachment.
- 3/4” valve bodies with 1/4-turn ceramic disc cartridge.
- Available in all finishes. Warranty varies according to finish.
- Certified to meet or exceed the following codes and standards: ASME A112.18.1/CSAB 125.1-2011

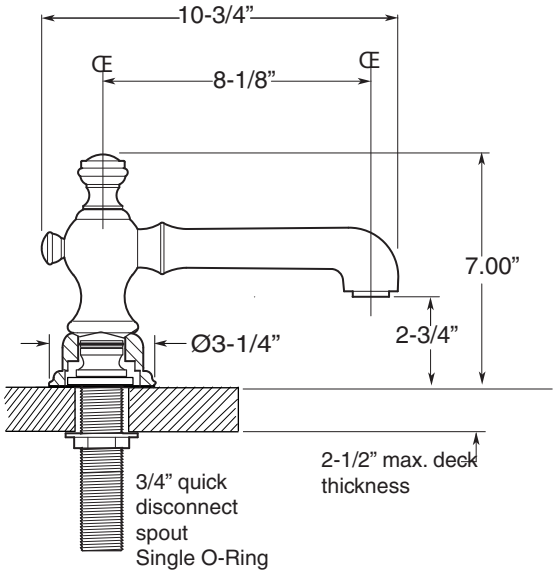

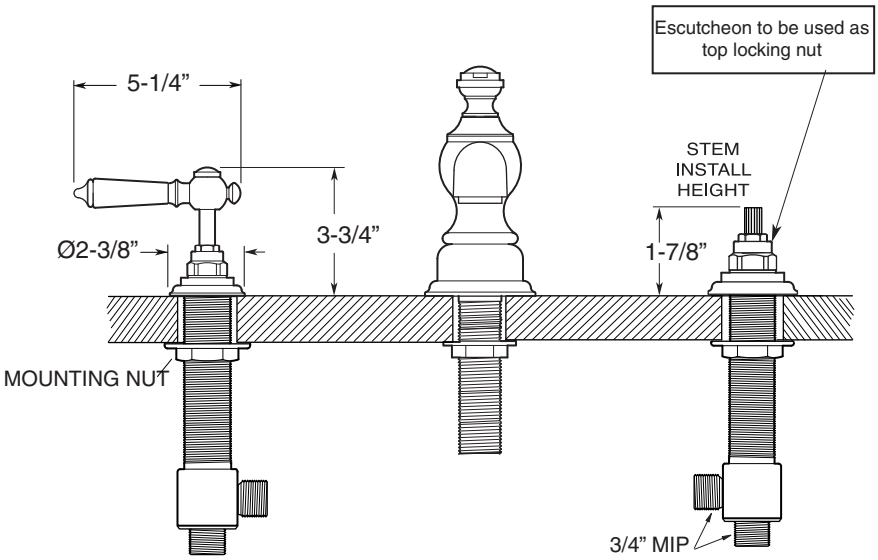

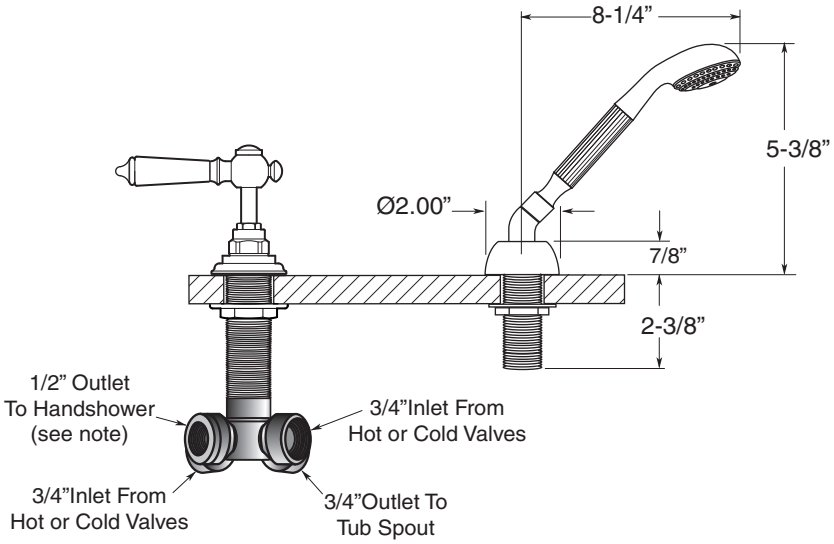

Spout and valves install through 1-1/4” diameter holes.
Plumber to provide 3/4” supply lines to valves

NOTE: 1/2” outlet for in-line vacuum breaker (18.15.055), and 60” chrome spiral hose (18.10.016) - INCLUDED

Note: Measurements are subject to change or cancellation. No responsibility is assumed for use of superseded or voided pages.

SIGMA
Designer Faucetry

Parts List
Series 1800

Waldorf
(Ceramic Lever)
Roman Tub Set with Deckmount
Diverter and Handshower

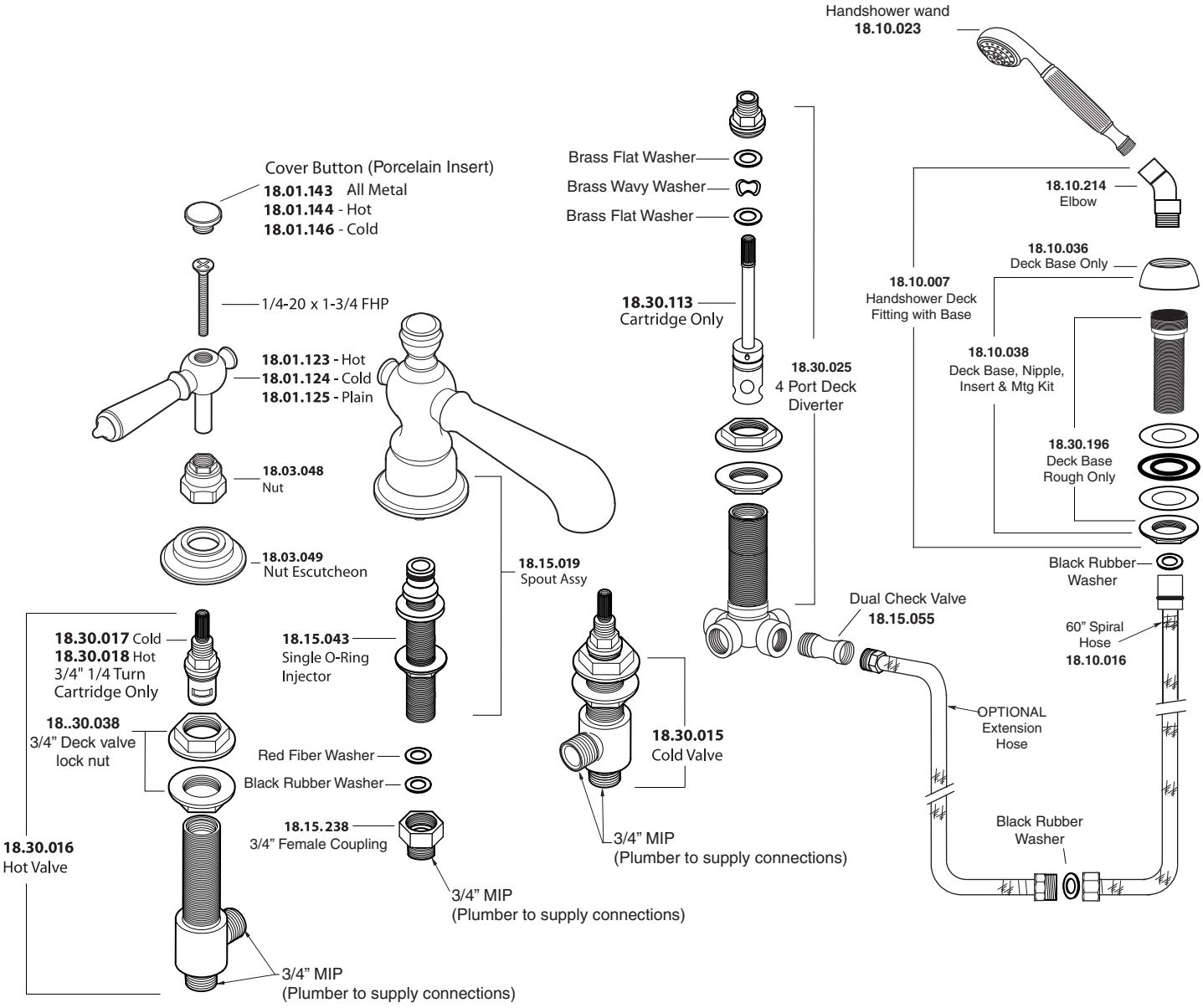

American Faucet & Coatings Corporation.

Tel: 760-598-5895, Toll Free Fax 800-621-8383, customerservice@sigmafaucet.com