SIGMA
Designer Faucetry

TechData

Specifications

Series 400

3-Hole Bidet Faucet
Charlotte Handle

1.000490

FEATURES:

- All brass construction.
- Hot & Cold valves and Diverter require 1-1/4" holes Max.
- Includes pop-up drain assembly with overflow. Longer ball rod available on request, P/N: APS.11.019
- Integral vacuum breaker with transfer valve
- Diverter controls water flow between douche spray & flushing rim
- Flexible hose connections supplied.
- Quarter turn ceramic disc valve cartridge.
- Available in all finishes. Warranty varies according to finish selection.
- Certified to meet and exceed the following codes and standards: ASME A112.18.1-2005/CSAB125.1-2005

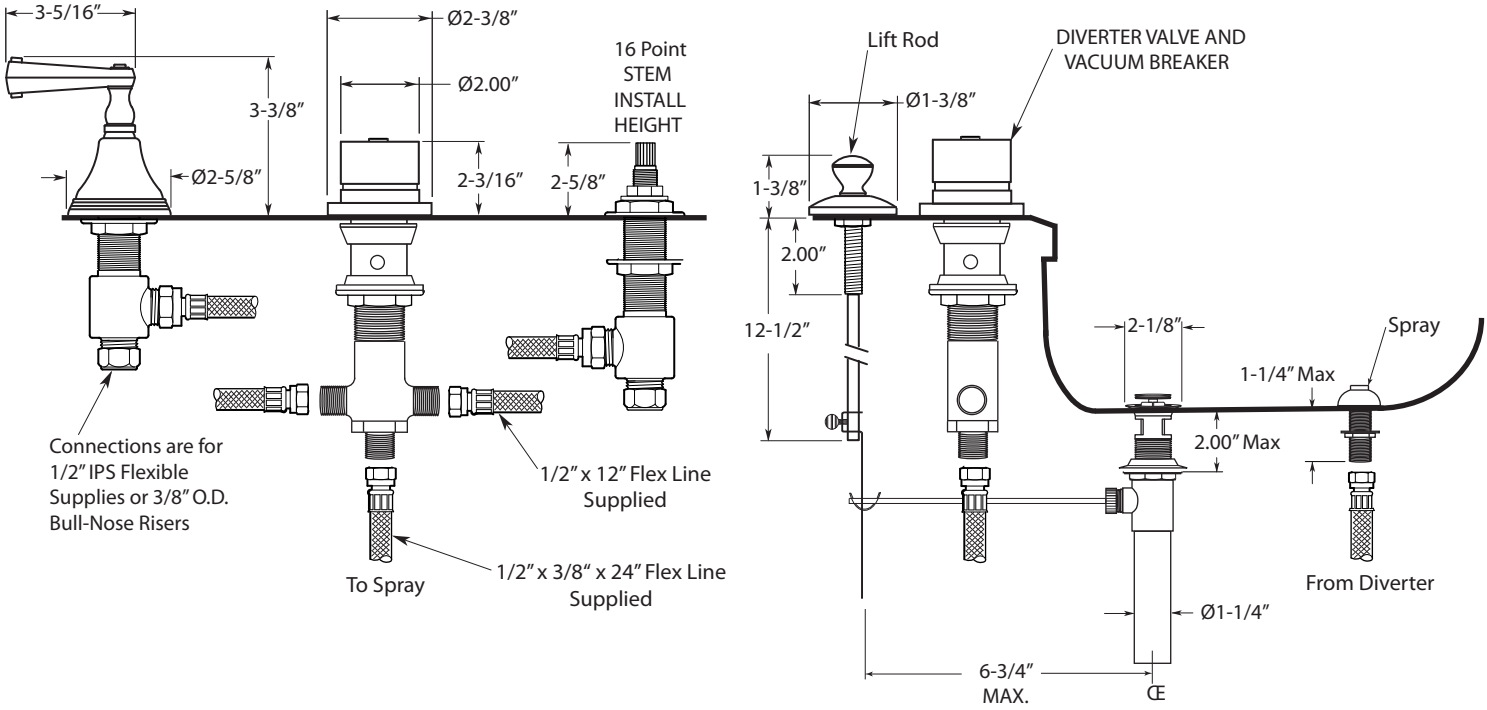

Note: Measurements are subject to change or cancellation. No responsibility is assumed for use of superseded or voided pages.