Phylrich

SPECIFICATIONS

Deck Tub Set with Hand Shower
Model K2242P1_026

Image shown may not be in the finish selected

FEATURES

- Style: Baroque Treasures
- Collection: Versailles
- 30" (762mm) maximum centers from diverter to hand shower
- Hand shower hose length is 59" (1499mm)
- 1-1/2" (38mm) hole size for valves and diverter
- 1-1/8" (29mm) hole size for spout
- 1-3/8" (35mm) hole size for hand shower
- Integral check valves for backflow protection

COLOR FINISHES

- Polished Nickel (K2242P1_014)
- Satin Nickel (K2242P1_015)
- Pewter(K2242P1_15A)
- Polished Chrome (K2242P1_026)
- Polished Brass (K2242P1_003)
- Polished Brass Antiqued (K2242P1_007)
- Satin Brass (K2242P1_004)
- Polished Gold(K2242P1_025)
- Polished Gold Antiqued (K2242P1_25D)
- Satin Gold (K2242P1_024)
- Satin Gold Antiqued (K2242P1_24D)
- Satin Jeweler's Gold (K2242P1_24J)
- Old English Brass (K2242P1_OEB)
- Antique Brass (K2242P1_047)
- Antique Bronze (K2242P1_11B)

WARRANTY

- Limited Lifetime

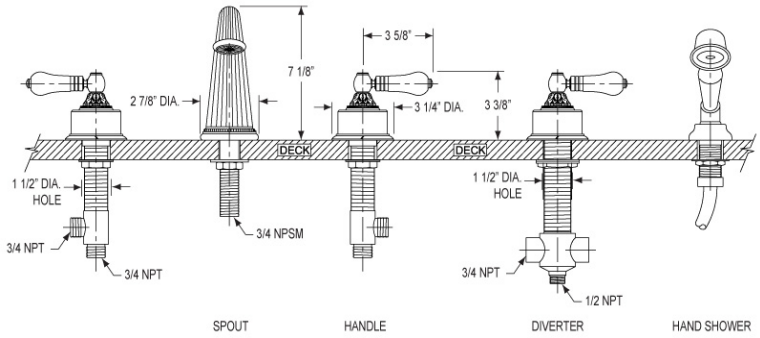

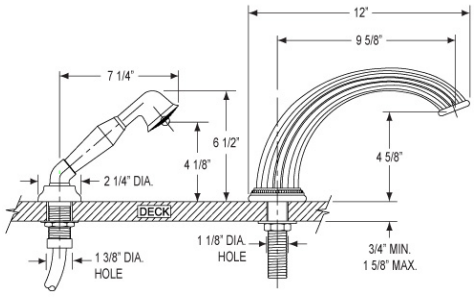

Phylrich
2222 Camden Court, Oak Brook IL 60523
1-800-749-5742 Fax: 1-866-80-9774
www.phylrich.com

©2010 Phylrich