Phylrich

SPECIFICATIONS

Wall Tub Set
Model K1137_026

FEATURES

- Style: Colonial Charm
- Collection: Ribbon & Reed
- Temperature controlled by handles

COLOR FINISHES

- Polished Nickel (K1137_014)
- Satin Nickel (K1137_015)
- Pewter(K1137_15A)
- Polished Chrome (K1137_026)
- Polished Brass (K1137_003)
- Polished Brass Antiqued (K1137_007)
- Satin Brass (K1137_004)
- Polished Gold(K1137_025)
- Polished Gold Antiqued (K1137_25D)
- Satin Gold (K1137_024)
- Satin Gold Antiqued (K1137_24D)
- Satin Jeweler's Gold (K1137_24J)
- Old English Brass (K1137_OEB)
- Antique Brass (K1137_047)
- Antique Bronze (K1137_11B)

WARRANTY

- Limited Lifetime

COMPLIES WITH

- ADA
- A112.18.1-05/CSA B125.1-2005-CERTIFIED
- cUPC-CERTIFIED
- UPC-CERTIFIED

Image shown may not be in the finish selected

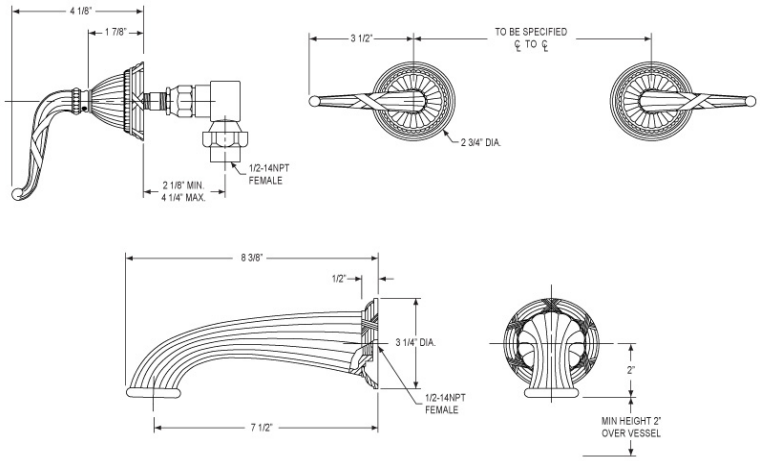

Phylrich
2222 Camden Court, Oak Brook IL 60523
1-800-749-5742 Fax: 1-866-80-9774
www.phylrich.com
©2010 Phylrich