12" Single Handle Wall Lavatory Set w/ Cross Handle

D131-17

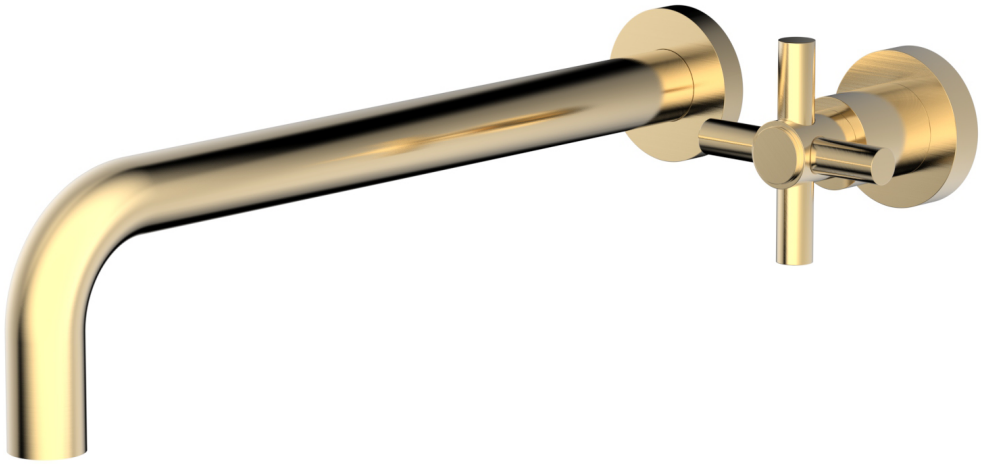

▪ PRODUCT FEATURES

- Style: Contemporary
- Collection: Basic
- Temperature Controlled By Handles
- Cross Tubular Handle
-
-

▪ TECHNICAL DETAILS

ADA Compliance: No
Drain Assembly Material: Brass
Fitting Hole Diameter: 1 1/8"
Number of Holes: Two Hole
Number of Handles: One
Handle Turn Angle: Quarter Turn
Spout Reach: 12"
Installation Type: Wall Mounted
Primary Material: Brass
Valve Material: Ceramic
Flow Restriction: 1.2 gpm
Water Pressure Maximum: 85 PSI
Water Pressure Minimum: 20 PSI
Water Pressure Recommended: 60 PSI

▪ PRODUCT DIMENSIONS

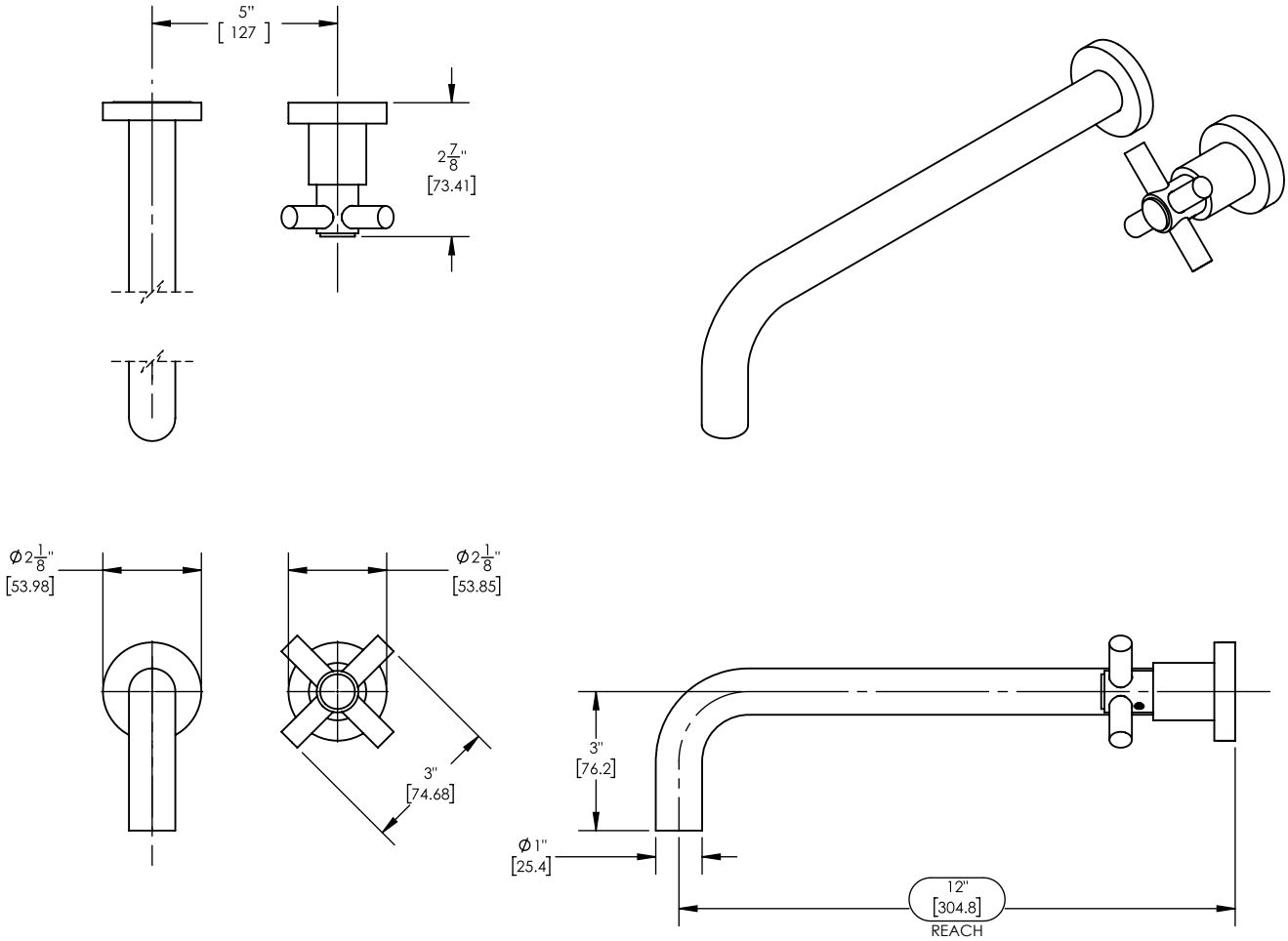

www. phylrich.com

1261 Logan Avenue, Costa Mesa, California 92626.
Phone: 714.361.4800 Fax: 714.617.3120

CODES & STANDARDS

ASME A112.181/ CSA B1251, ASME 112.18.2/ CSA B125.2, ANSI NSF, CEC

WARRANTY

Mechanical Warranty: 10 Years from date of purchase.
Finish Warranty: See catalog for further information.