NEWPORT BRASS®
Flawless Beauty. From Faucet to Finish.™

MIRO

Tub and Handshower Set
1600-4272

Features

- Solid brass construction
- Quarter-turn washerless ceramic disc valve cartridges
- ADA compliant traditional cross handles with lever diverter
- 3/4" NPT hot and cold inlet fittings
- 7" (17.8 cm) tub spout reach from inlet fittings (c-c)
- 2" (5.1 cm) handshower diameter
- 2.0 gallons (7.6 liters) per minute handshower maximum flow rate
- For deck-mounted configurations

Codes / Standards Compliance

Meets or exceeds the following at date of manufacture:

- ASME A112.18.1/CSA B125.1
- IAPMO/cUPC
- IPC
- ADA
- ICC/ANSI A117.1
- CSA B64
- Energy Policy Act of 1992
- All applicable US Federal and State material regulations

Colors / Finishes

- 10B: Oil Rubbed Bronze
- 15: Polished Nickel
- 15S: Satin Nickel - PVD
- 26: Polished Chrome

- Other: Refer to the Newport Brass catalog for additional color/finish options.

Specified Model

Model	Description	Colors | Finishes				
1600-4272	Exposed Tub and Handshower Set (Deck Mount)	☐ 10B	☐ 15	☐ 15S	☐ 26	☐ Other

Product Specification **Add "Color / Finish" suffix to Model number, below.**

The Exposed Tub and Handshower Set shall be made of solid brass construction and incorporate quarter-turn washerless ceramic disc valve cartridges. Exposed Tub and Handshower Set shall incorporate a lever diverter and ADA complaint cross handles. Product shall be designed for deck-mounted configurations. Product shall have a 7" (17.8 cm) tub spout reach (c-c) and 3/4" NPT deck-mounted hot/cold inlet fittings. Product shall feature a solid brass handshower having a diameter of 2" (5.1 cm) and a 2.0 gallons (7.6 liters) per minute maximum flow rate. Exposed Tub and Handshower Set shall be Newport Brass Model 1600-4272/____.

t: 949.417.5207 | www.newportbrass.com
©2017 Brasstech, Inc.

1600-4272

PRODUCT DIMENSIONS *(Units are in inches)*

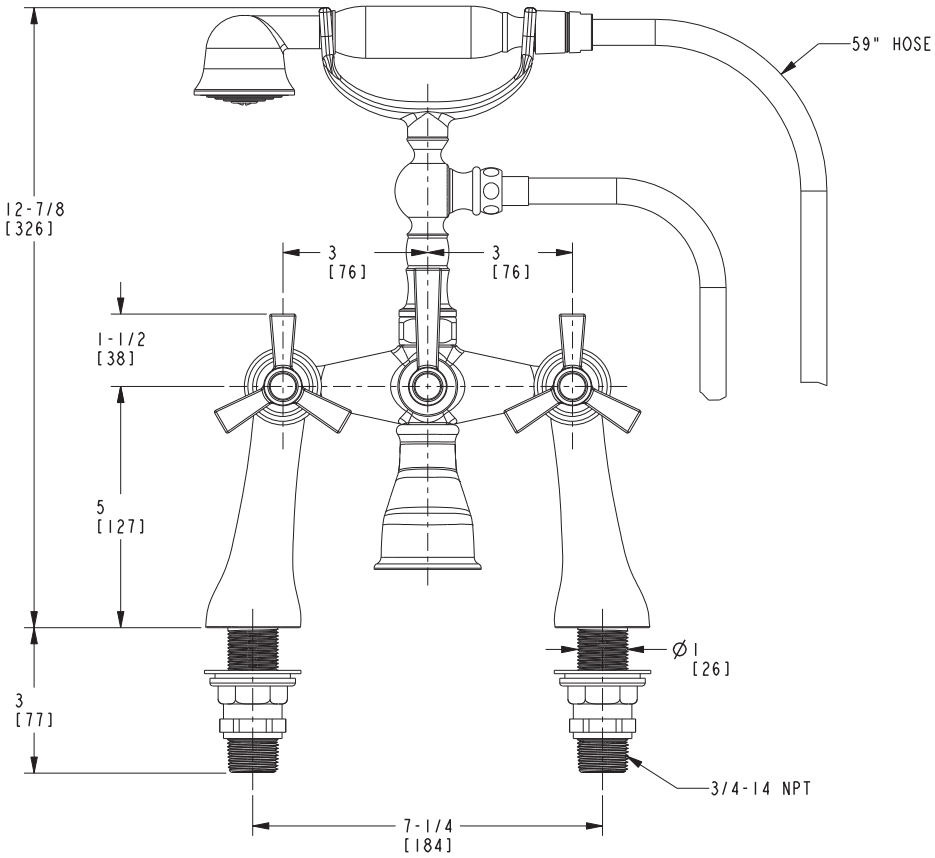

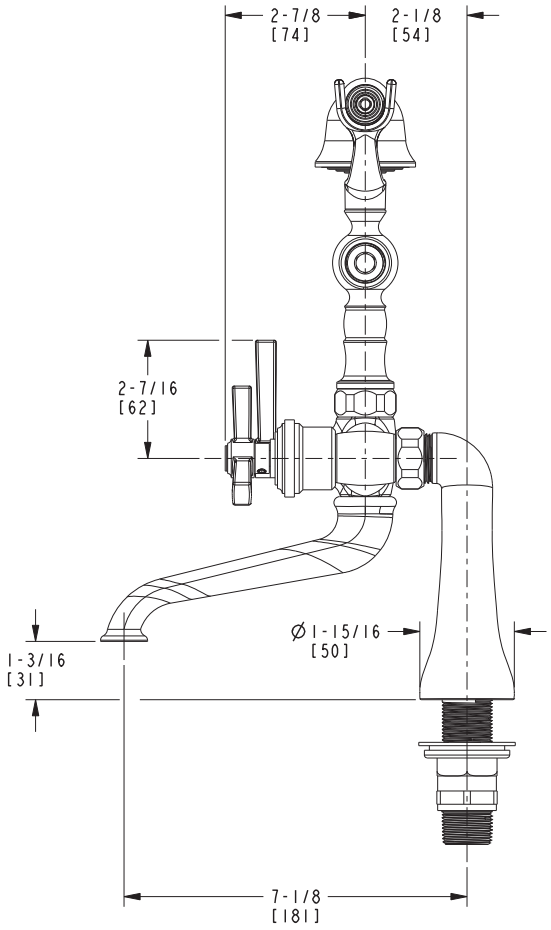

Miro Tub and Handshower Set

1600-4272

NEWPORT BRASS
Flawless Beauty. From Faucet to Finish.™

t: 949.417.5207 | www.newportbrass.com
©2017 Brasstech, Inc.