Anglesey™ | K-4352

Floor-mount top spud flushometer bowl with exposed trapway

Features

- Elongated bowl offers added room and comfort
- Comfort Height® feature offers chair-height seating that makes sitting down and standing up easier for most adults
- 1-1/2" (38 mm) top spud
- 4" (102 mm) rough-in
- 2-1/8" (54 mm) fully glazed trapway
- 1.28 or 1.6 gpf (4.8 or 6.0 lpf) depending on flushometer specified
- Floor-mount rear outlet flushometer bowl

Sustainability

Available Colors/Finishes

Color tiles intended for reference only.

0 White

1-800-4KOHLER (1-800-456-4537)
Kohler Co. reserves the right to make revisions without notice to product specifications.
For the most current specification sheet, go to www.kohler.com USA or www.kohler.ca Canada.
4-15-2026 9:0 - US-CA

Codes/Standards

ADA, OBC, CSA B651 compliant when installed to the specific requirements of these regulations.
Accessibility standards may require controls to be located on the open side of the toilet.
Plumbing codes may require elongated toilets and elongated, open-front seats in public bathrooms.
This product should be used with a WaterSense labeled counterpart with the same rated flush volume to ensure the complete system meets the requirements of this specification for water efficiency and performance.

ADA | CSA B651 | OBC

ASME A112.19.2/CSA B45.1
DOE - Energy Policy Act 1992
EPA WaterSense®
ADA
ICC/ANSI A117.1
CSA B651
OBC

Technical Information

Installation Type:	Floor-mount
Rough-in:	4"
Flush Type:	Siphon
Flush Rate:	1.28 or 1.6 gpf (4.8 or 6 lpf)
Bowl Shape:	Elongated
Seat-Mounting Holes:	5-1/2" (140 mm)
Waste Outlet:	Wall
Trapway Size:	2-1/8" (54 mm)
Trapway Type:	Exposed
Water Surface Size:	12" x 10" (305 mm x 254 mm)
Rim to Water Surface:	5-7/8" (149 mm)

Material

- Vitreous china

Warranty

See website for detailed warranty information.

KOHLER® One-Year Limited Warranty

1-800-4KOHLER (1-800-456-4537)
Kohler Co. reserves the right to make revisions without notice to product specifications.
For the most current specification sheet, go to www.kohler.com USA or www.kohler.ca Canada.
4-15-2026 9:0 - US-CA

THE BOLD LOOK OF KOHLER

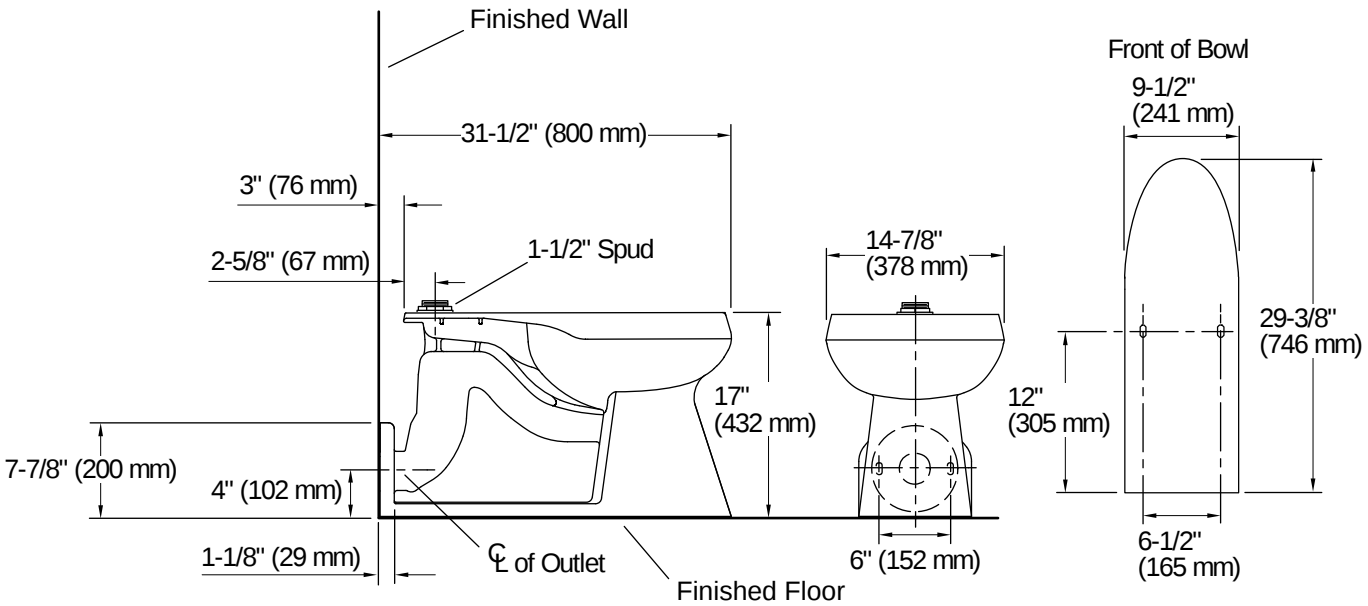

Installation

- Seat and supply line sold separately

Installation Notes

Install this product according to the installation instructions.

For back-to-back installations: Connect the toilet to the vertical stack using a: double fixture fitting, double combination wye and 1/8 bends, or double wye and 1/8 bends.
Product dimensions are nominal and may vary per ASME A112.19.2 tolerances.
This product should be used with a WaterSense labeled counterpart with the same rated flush volume to ensure the complete system meets the requirements of this specification for water efficiency and performance.
ADA, OBC, CSA B651 compliant when installed to the specific requirements of these regulations.
Plumbing codes may require elongated toilets and elongated, open-front seats in public bathrooms.
Accessibility standards may require controls to be located on the open side of the toilet.

1-800-4KOHLER (1-800-456-4537)
Kohler Co. reserves the right to make revisions without notice to product specifications.
For the most current specification sheet, go to www.kohler.com USA or www.kohler.ca Canada.
4-15-2026 9:0 - US-CA

THE BOLD LOOK OF KOHLER