Sinks and Bathtubs
G-9985
Pop-up bathtub drain with overflow

Available Finishes

Polished Chrome	Matte White	Polished Nickel	Polished Nickel PVD®	Steelnox® (Satin Nickel)	Brushed Nickel	Brushed Nickel PVD®	Polished Champagne PVD®	Brushed Champagne PVD®	Brushed Gold PVD®
Polished Brass PVD®	Brushed Brass PVD®	24K Polished Gold	24K Brushed Gold	Unfinished Brushed Brass	Unfinished Brass	Satin Gold PVD®	Warm Bronze PVD®	Polished Rose Gold / Polished Copper PVD®	Brushed Rose Gold / Brushed Copper PVD®
Polished Tuscan Bronze PVD®	Vintage Brushed Brass	Olive Bronze	Gunmetal PVD®	Onyx PVD®	Brushed Onyx PVD®	Gloss Sleek-Stone®	Matte Sleek-Stone®	Architectural Black™	Matte Black
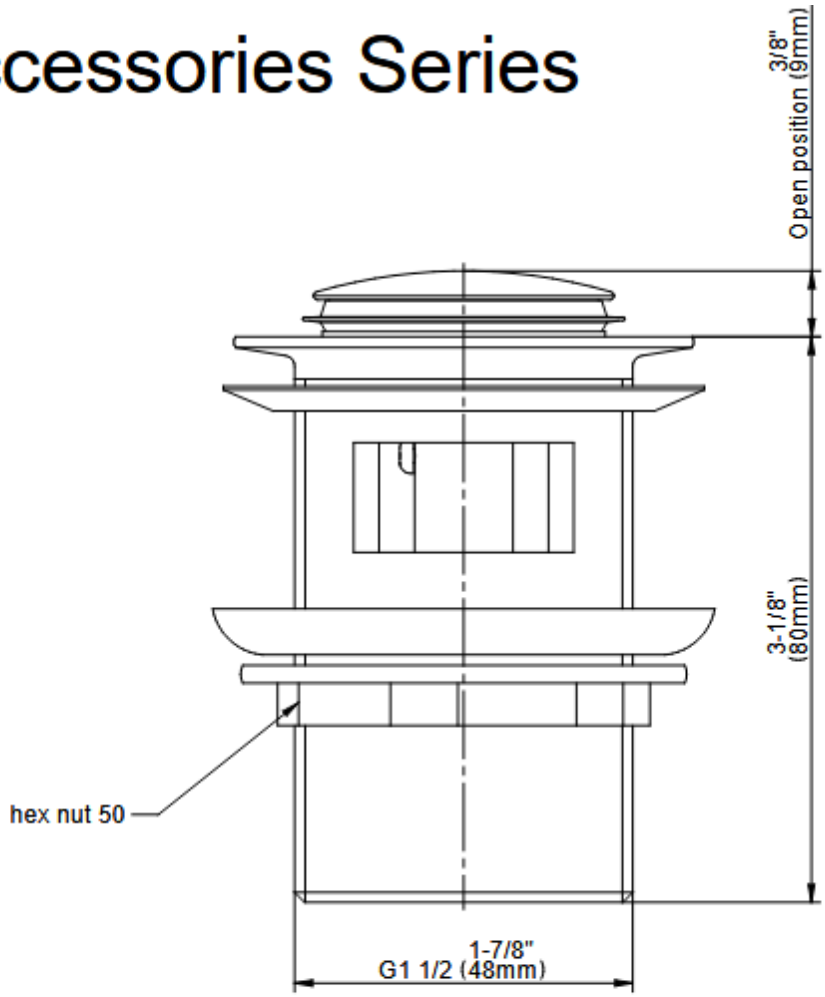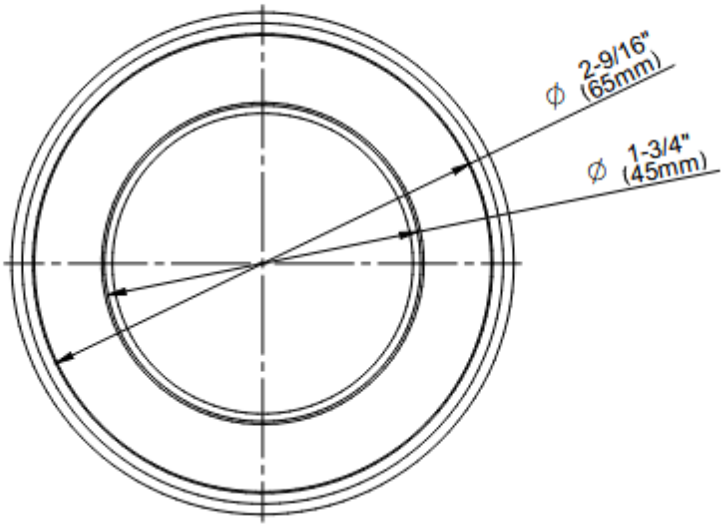
Accessories Series