G-9962
Grid Drain without Overflow

Product Features

- Fits 1-3/4" Drain Opening
- With 1-1/4" tailpiece

Available Finishes
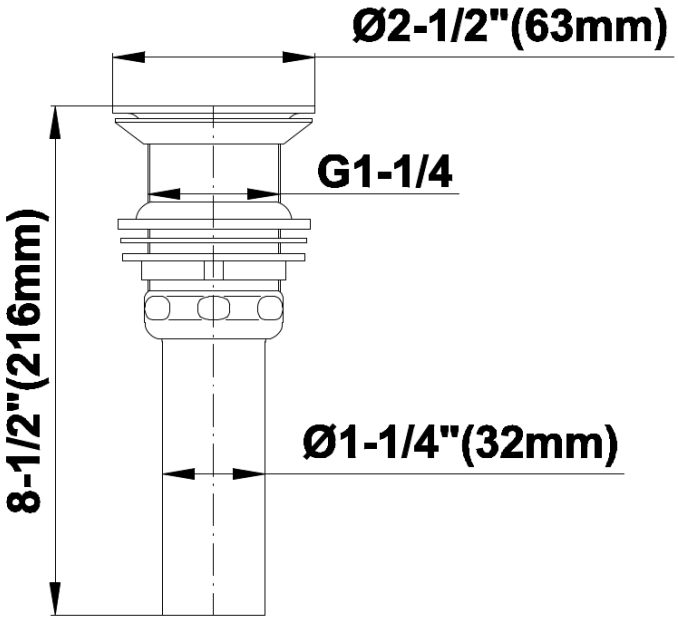
G-9962
Grid Drain without Overflow