G-9925
Soap/Lotion Dispenser

Product Features

- Refillable from top
- 8.5 fluid ounce capacity

Available Finishes

Polished Chrome
Matte White
Polished Nickel
Polished Nickel PVD®
Steelnox® (Satin Nickel)
Brushed Nickel
Brushed Nickel PVD®
Polished Champagne PVD®
Brushed Champagne PVD®
Polished Gold PVD®
Brushed Gold PVD®
Polished Brass PVD®
Brushed Brass PVD®
Satin Gold PVD®
Warm Bronze PVD®
Polished Rose Gold / Polished Copper PVD®
Brushed Rose Gold / Brushed Copper PVD®
Polished Tuscan Bronze PVD®
Brushed Tuscan Bronze PVD®
Vintage Brushed Brass
Olive Bronze
Gunmetal PVD®
Onyx PVD®
Brushed Onyx PVD®
Architectural Black™
Matte Black
Brushed Brass PVD / Brushed Onyx PVD Accents
Brushed Onyx PVD / Brushed Brass PVD Accents
Matte Black / Steelnox® (Satin Nickel) Accents
Steelnox® Satin Nickel / Matte Black Accents
Polished Chrome / Matte Black Accents
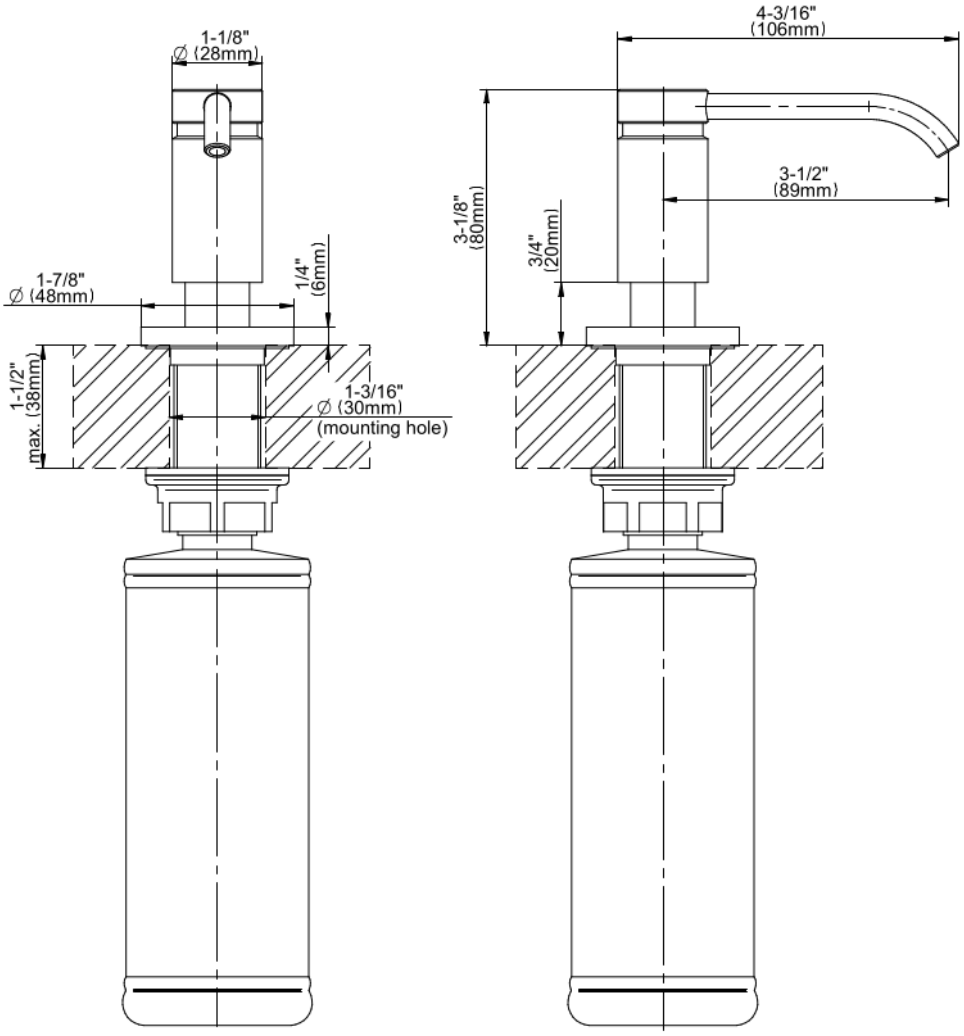
G-9925
Soap/Lotion Dispenser