G-9916-T
Air Switch

Product Features

- Use to activate garbage disposal's electric on/off switch by using an air tube
- Solid brass construction
- Use with G-09946 Air Activation Switch Control Box

Available Finishes
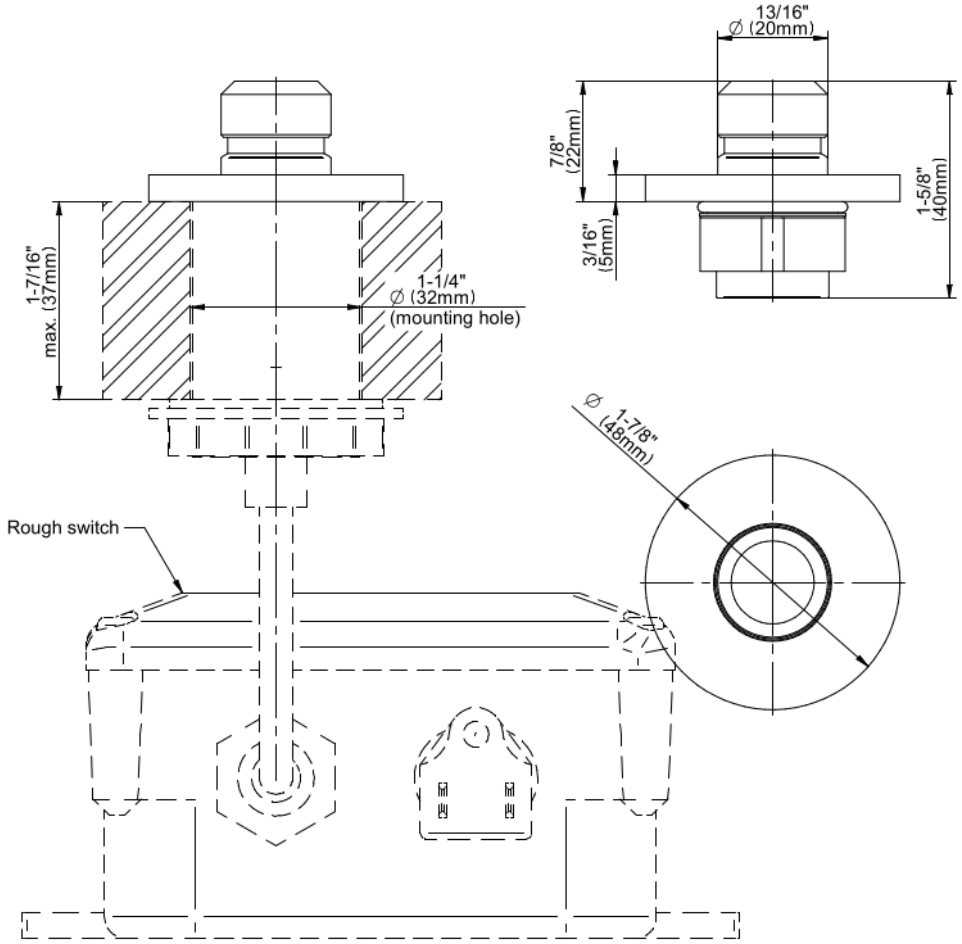
G-9916-T
Air Switch