Sento Collection
G-9207
Tissue Holder & Towel Bar

Code compliance

- ADA

Available Finishes

Polished Chrome | Matte White | Polished Nickel | Polished Nickel PVD® | Steelnox® (Satin Nickel) | Brushed Nickel | Brushed Nickel PVD® | Polished Champagne PVD® | Brushed Champagne PVD® | Polished Gold PVD®

Brushed Gold PVD® | Polished Brass PVD® | Brushed Brass PVD® | 24K Polished Gold | 24K Brushed Gold | Unfinished Brass | Unfinished Brushed Brass | Satin Gold PVD® | Warm Bronze PVD® | Polished Rose Gold / Polished Copper PVD®
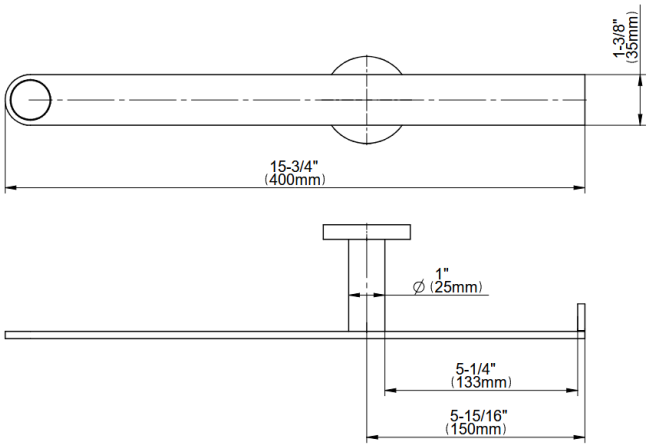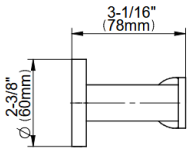
Brushed Rose Gold / Brushed Copper PVD® | Polished Tuscan Bronze PVD® | Brushed Tuscan Bronze PVD® | Vintage Brushed Brass | Olive Bronze | Gunmetal PVD® | Onyx PVD® | Brushed Onyx PVD® | Architectural Black™ | Matte Black