M.E. Collection
G-9138
Tissue Holder

Code compliance

- ADA

Available Finishes

Polished Chrome	Matte White	Polished Nickel	Polished Nickel PVD®	Steelnox® (Satin Nickel)	Brushed Nickel	Brushed Nickel PVD®	Polished Champagne PVD®	Brushed Champagne PVD®	Polished Gold PVD®
Brushed Gold PVD®	Polished Brass PVD®	Brushed Brass PVD®	24K Polished Gold	24K Brushed Gold	Unfinished Brass	Unfinished Brushed Brass	Satin Gold PVD®	Warm Bronze PVD®	Polished Rose Gold / Polished Copper PVD®
Brushed Rose Gold / Brushed Copper PVD®	Polished Tuscan Bronze PVD®	Brushed Tuscan Bronze PVD®	Vintage Brushed Brass	Olive Bronze	Gunmetal PVD®	Onyx PVD®	Brushed Onyx PVD®	Architectural Black™	Matte Black

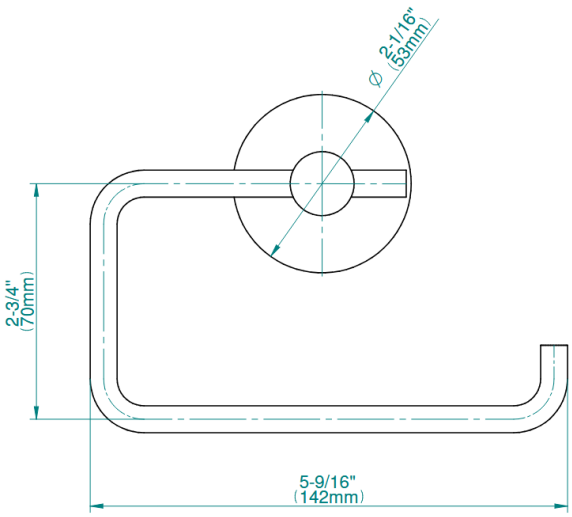

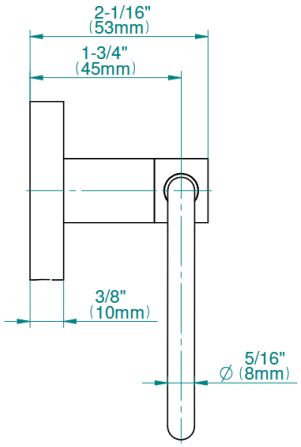

The measurements shown are for reference only. Products and specifications shown are subject to change without notice. Revised 09/2023