G-8689
Finezza Handhower w/Wall Bracket

Product Features

- Handshower holder
- 59" shower hose (PVD finishes use 59" flex hose)
- Includes transitional handshower - G-8724
- Includes 1/2" NPT male threaded wall supply elbow
- Includes internal backflow preventer
- Handshower flow rate ? 1.8 max gpm

Code compliance

- CALGreen

Available Finishes
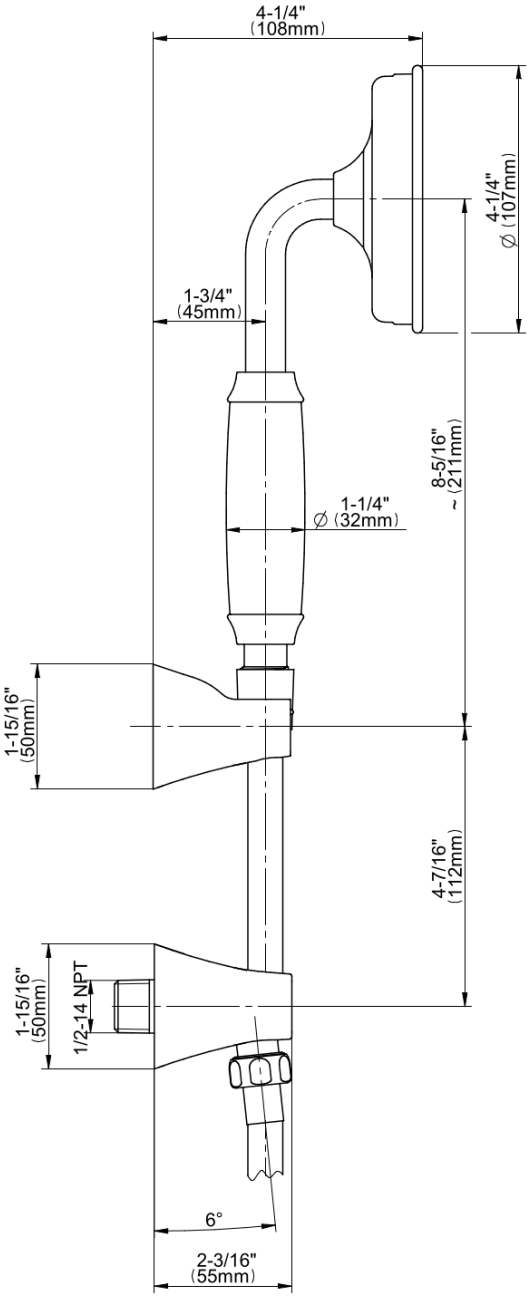
G-8689
Finezza Handhower w/Wall Bracket