Finezza Collection
G-8656
Finezza DUE Handshower w/Wall-Mounted Slide Bar

Product Features

- 22” wall-mounted slide bar
- 59” shower hose (PVD finishes use 59” flex hose)
- Includes transitional handshower - G-8724
- Adjustable bracket fits all hoses with conical nut
- Includes 1/2” NPT male threaded wall supply elbow
- Includes internal backflow preventer
- Handshower flow rate ? 1.8 max gpm

Code compliance

- CALGreen

Available Finishes
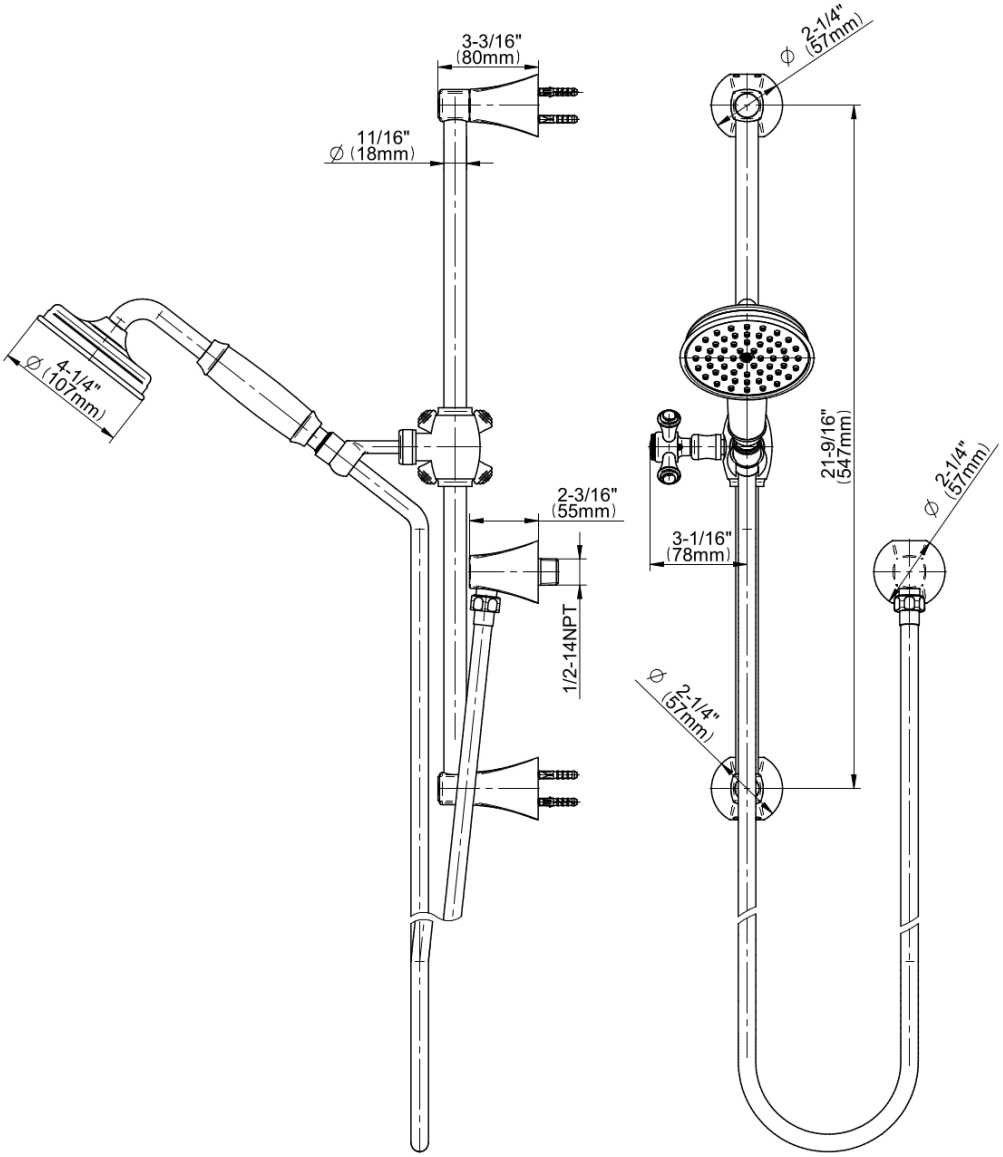
Finezza Collection
G-8656
Finezza DUE Handshower w/Wall-Mounted Slide Bar