G-8636-C16SB
Traditional Handshower w/Wall-Mounted Slide Bar

Product Features

- Handshower w/27
- 59
- Adjustable bracket fits all hoses with conical nut
- Handshower flow rate ? 1.5 max gpm
- Includes internal backflow preventer

Code compliance

- CALGreen

Available Finishes
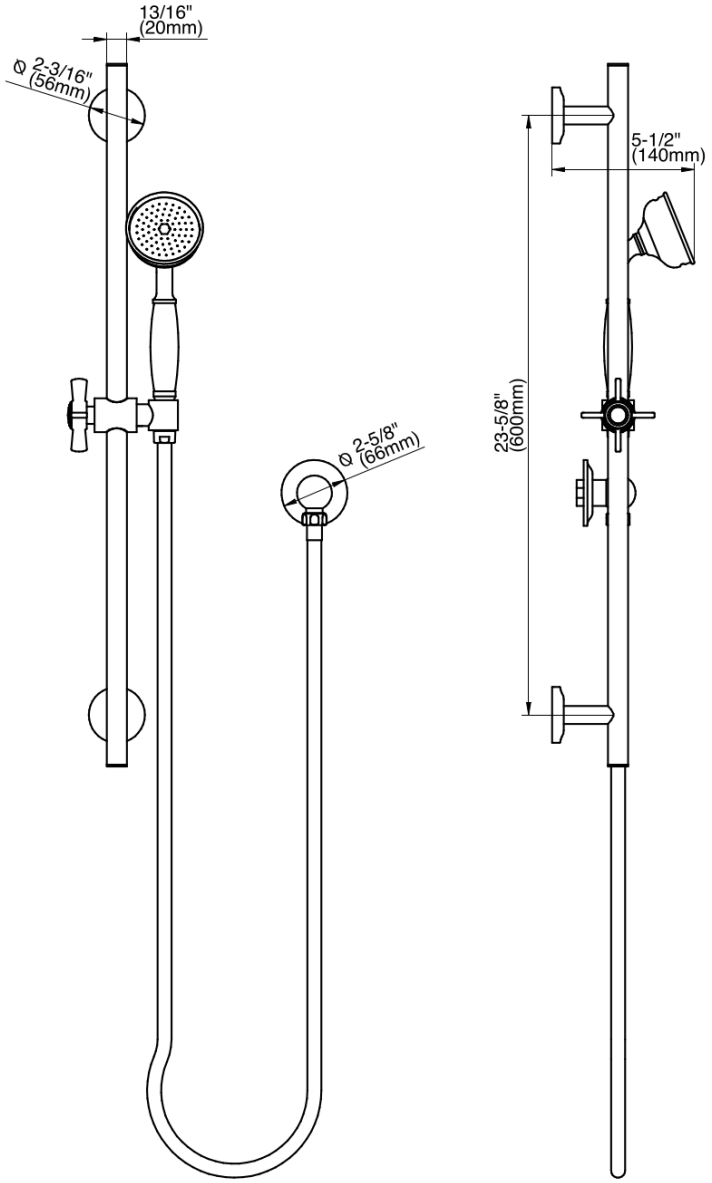
G-8636-C16SB
Traditional Handshower w/Wall-Mounted Slide Bar