G-8406
Finezza 9" Showerhead

Product Features

- 126 no-clog, easy-clean rubber spray nozzles
- Recommended use with ceiling shower arm
- Recommended for use at no more than 10 degrees tilt
- Showerhead flow rate ? 1.8 max gpm

Code compliance

- CALGreen

Available Finishes
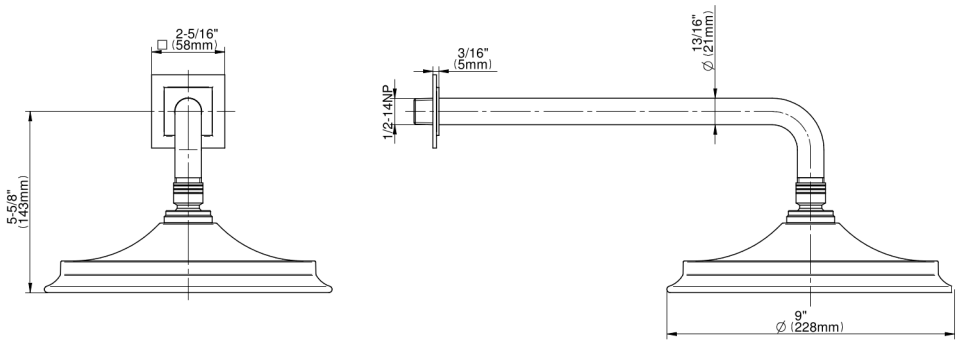
G-8406
Finezza 9" Showerhead