Topaz Collection
G-8396
Traditional Showerhead with Arm

Product Features

- 5” shower arm and flange
- Octagon shape with 40 spray openings
- Metal ball-joint allows for easy showerhead angle adjustment
- Flange design complements M-Series traditional trim plates
- Showerhead flow rate ? 1.8 max gpm

Code compliance

- CALGreen

Available Finishes
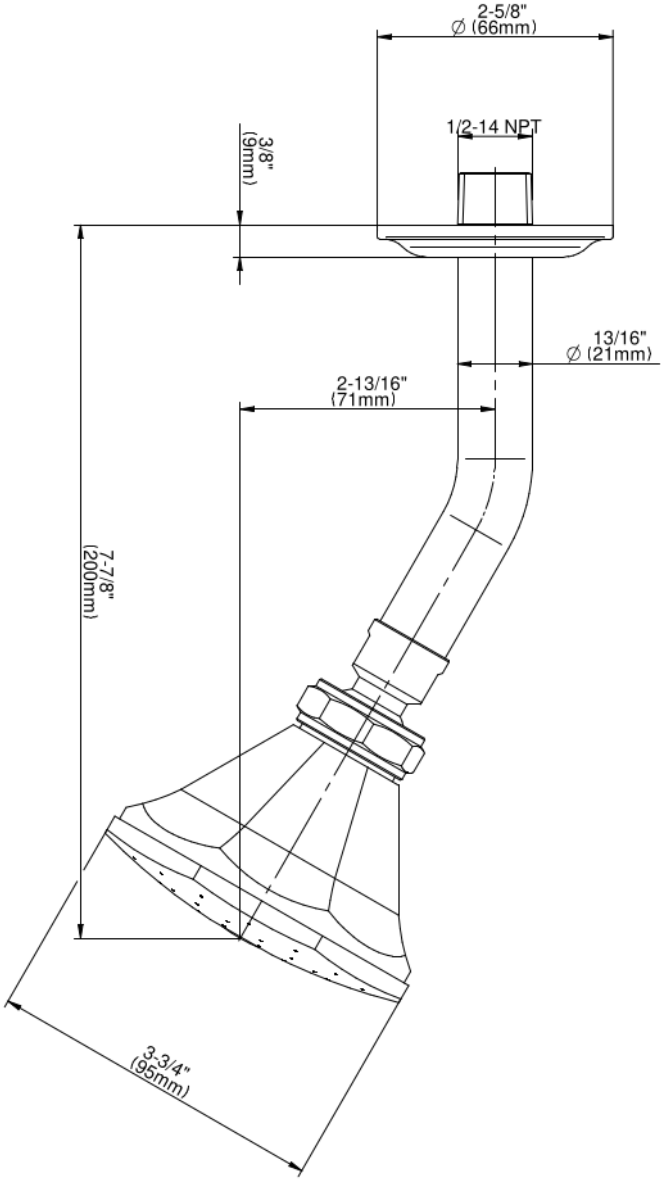
Topaz Collection
G-8396
Traditional Showerhead with Arm