G-8199-LM60E1-T
Vignola M-Series Stop/Volume Control Valve Trim with Handle

Product Features

- Single metal handle
- Decorative trim plate
- Use with G-8076 Stop/Volume Control Rough Valve with Pass-Through or G-8077 Stop/Volume Control Rough Valve
- To complete package, you must order Rough Valve

Code compliance

- ADA

Available Finishes
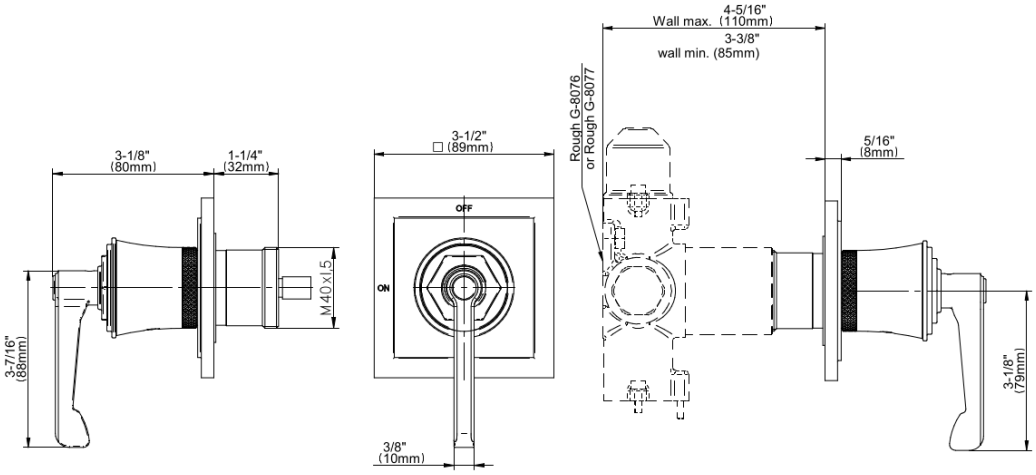
G-8199-LM60E1-T
Vignola M-Series Stop/Volume Control Valve Trim with Handle