G-8097-LM46E1-T
Terra M-Series Stop/Volume Control Valve Trim with Handle

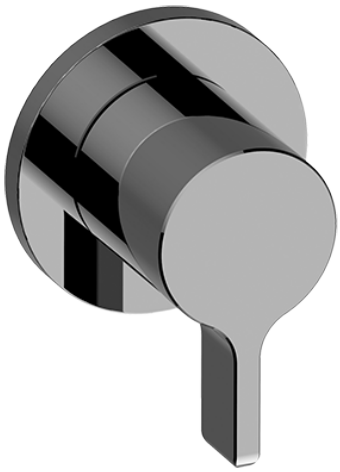

Product Features

- Single metal handle
- Decorative trim plate
- Use with G-8076 Stop/Volume Control rough valve with Pass-Through or G-8077 Stop/Volume Control rough valve
- To complete package, you must order rough valve

Code compliance

- ADA

Available Finishes

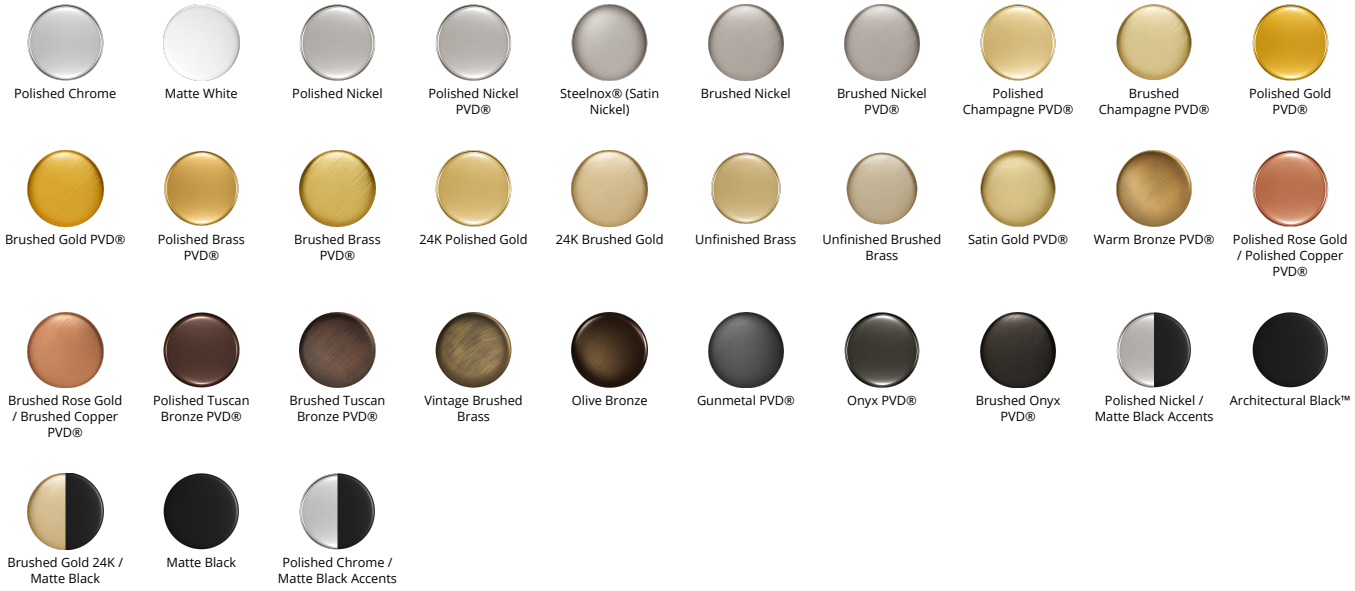
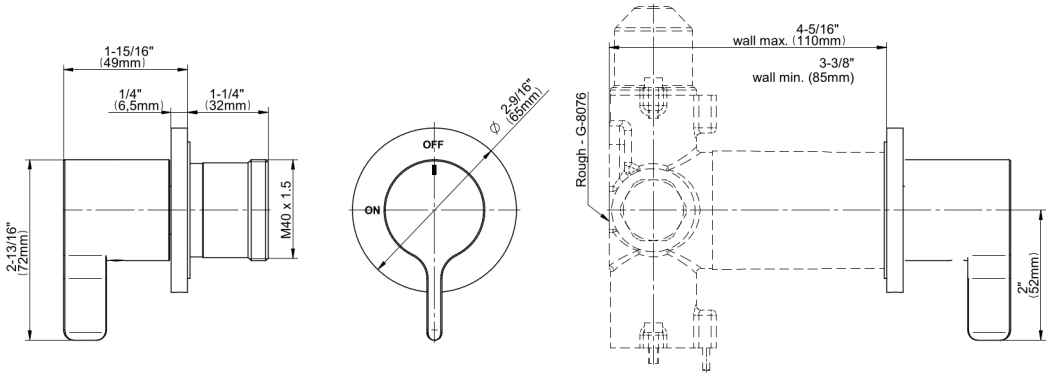
G-8097-LM46E1-T
Terra M-Series Stop/Volume Control Valve Trim with Handle