Adley Collection
**G-8088H-ALM15C2-T**
Adley M-Series Valve Horizontal Trim with Four Handles

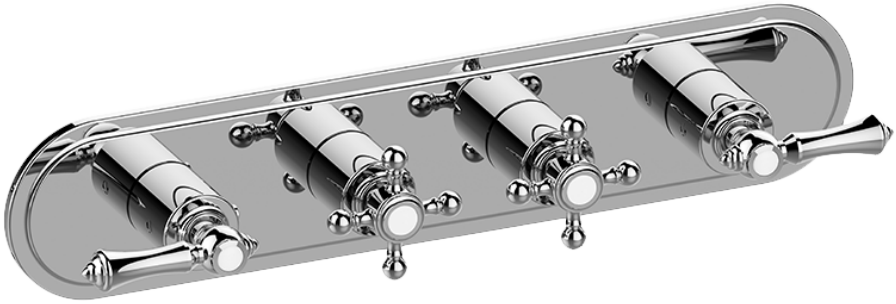

## Product Features

- Four metal handles
- Decorative trim plate
- Use with M-Series rough valves
- ALM15C2, ALM34C2, ALC1C2 handles should not be used with used with 2-way or 3-way diverter valve

## Code compliance

- ADA

## Available Finishes

Polished Chrome
Matte White
Polished Nickel
Polished Nickel PVD®
Steelnox® (Satin Nickel)
Brushed Nickel
Brushed Nickel PVD®
Polished Champagne PVD®
Brushed Champagne PVD®
Polished Gold PVD®
Brushed Gold PVD®
Polished Brass PVD®
Brushed Brass PVD®
24K Polished Gold
24K Brushed Gold
Unfinished Brass
Unfinished Brushed Brass
Satin Gold PVD®
Warm Bronze PVD®
Polished Rose Gold / Polished Copper PVD®
Brushed Rose Gold / Brushed Copper PVD®
Polished Tuscan Bronze PVD®
Brushed Tuscan Bronze PVD®
Vintage Brushed Brass
Olive Bronze
Gunmetal PVD®
Onyx PVD®
Brushed Onyx PVD®
Architectural Black™
Matte Black
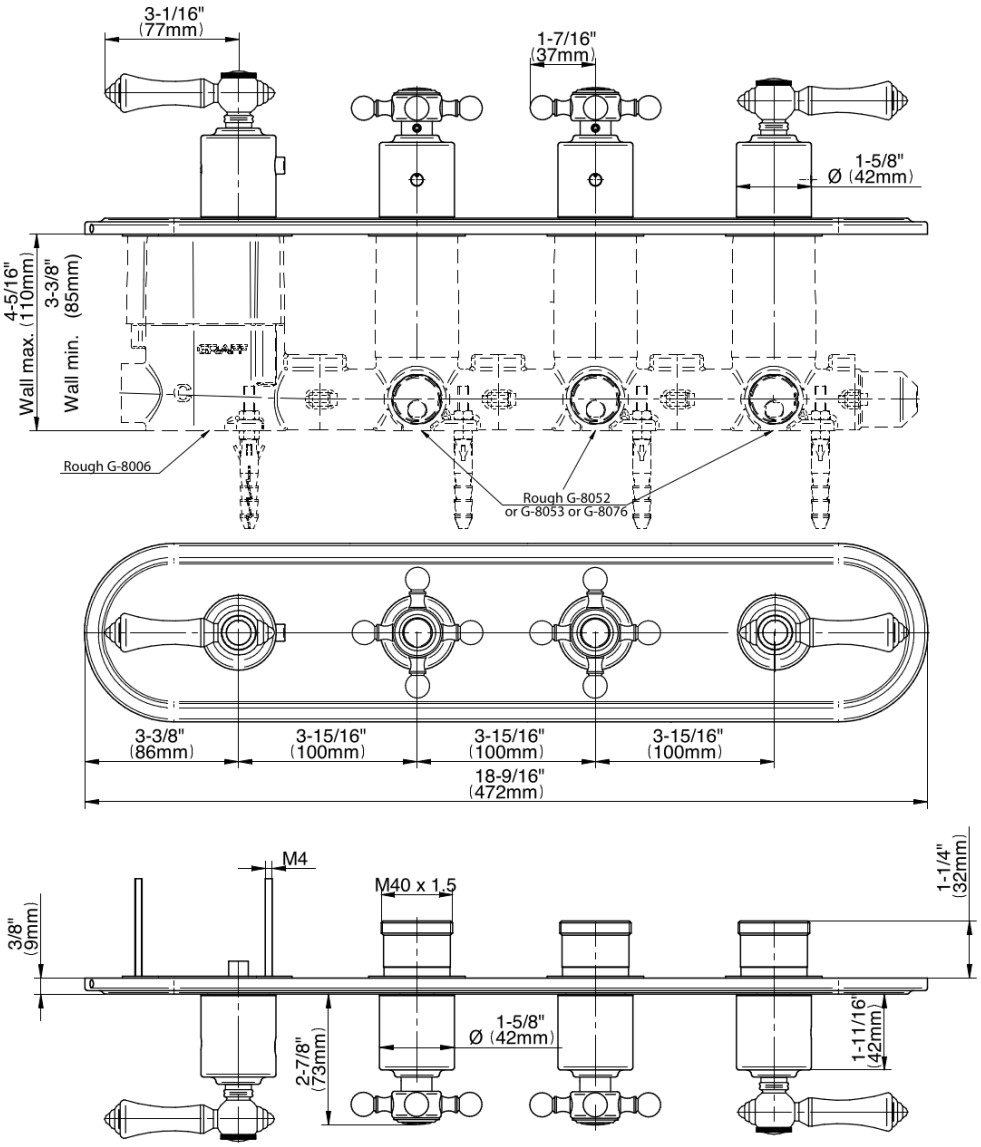
Adley Collection
**G-8088H-ALM15C2-T**
Adley M-Series Valve Horizontal Trim with Four Handles