Adley Collection
G-8087H-LM15C2-T
Adley M-Series Valve Horizontal Trim with Three Handles

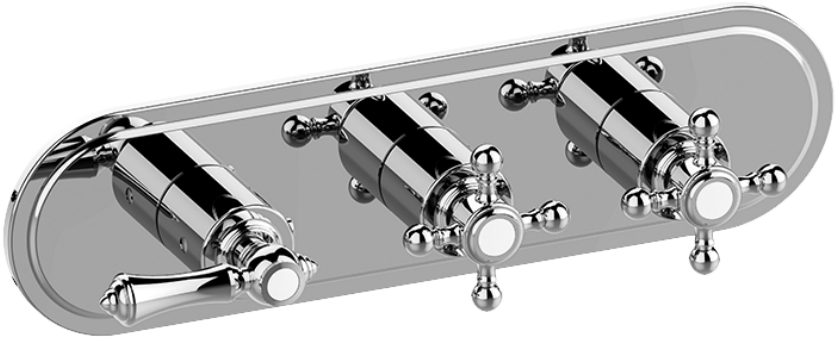

Product Features

- Three metal handles, decorative trim plate
- Use with M-Series rough valves
- ALM15C2, ALM34C2, ALC1C2 handles should not be used with used with 2-way or 3-way diverter valve

Available Finishes
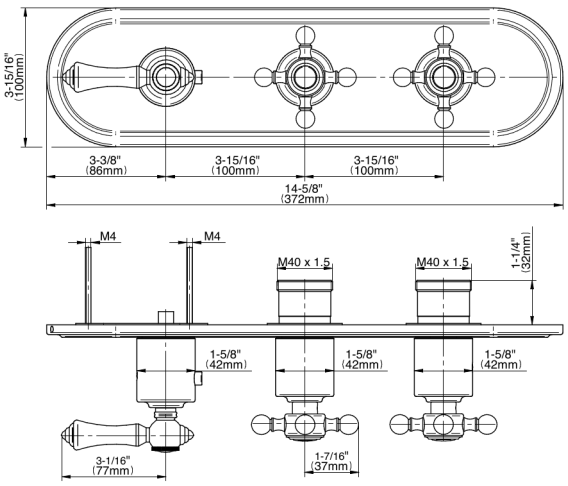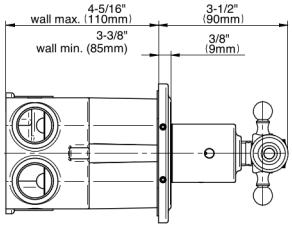
Adley Collection
G-8087H-LM15C2-T
Adley M-Series Valve Horizontal Trim with Three Handles