Vintage Collection
G-8087H-ALM56C18-T
Vintage M-Series Valve Horizontal Trim with Three Handles

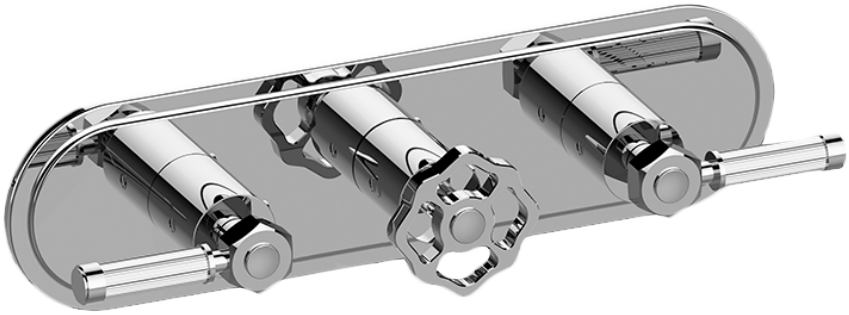

Product Features

- Three metal handles
- Decorative trim plate
- Use with M-Series rough valves
- ALM56C18 handles should not be used with 2-way or 3-way diverter valves
- Available Spring 2019 - call for earlier availability

Available Finishes

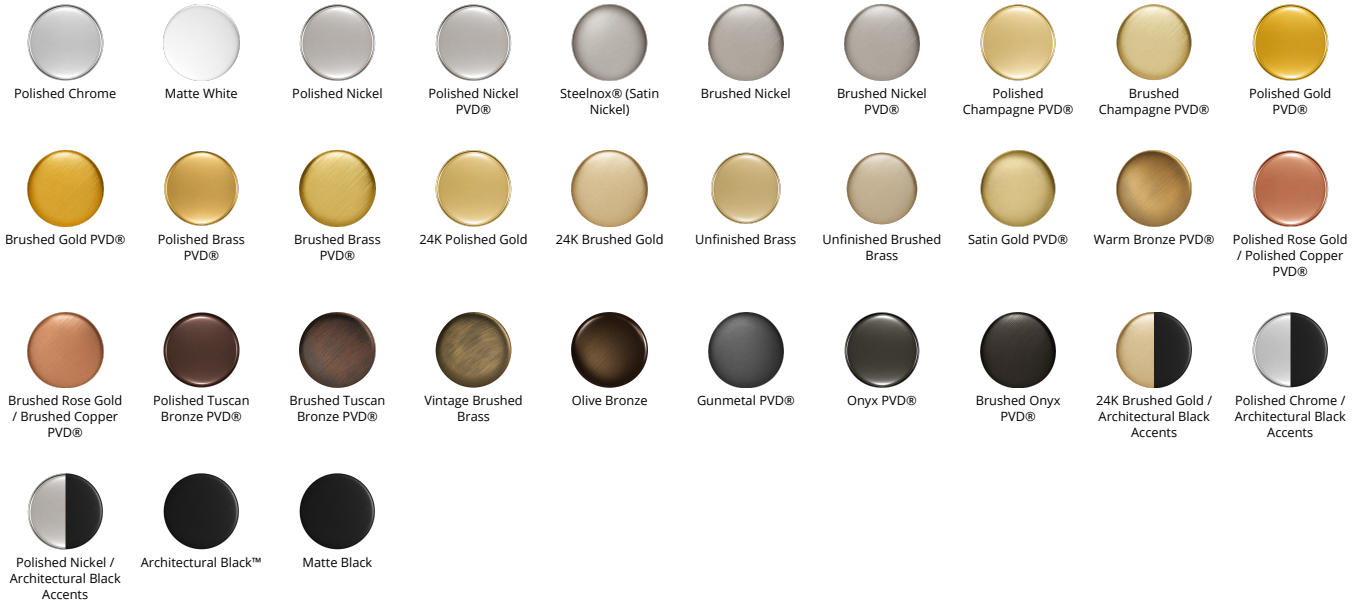
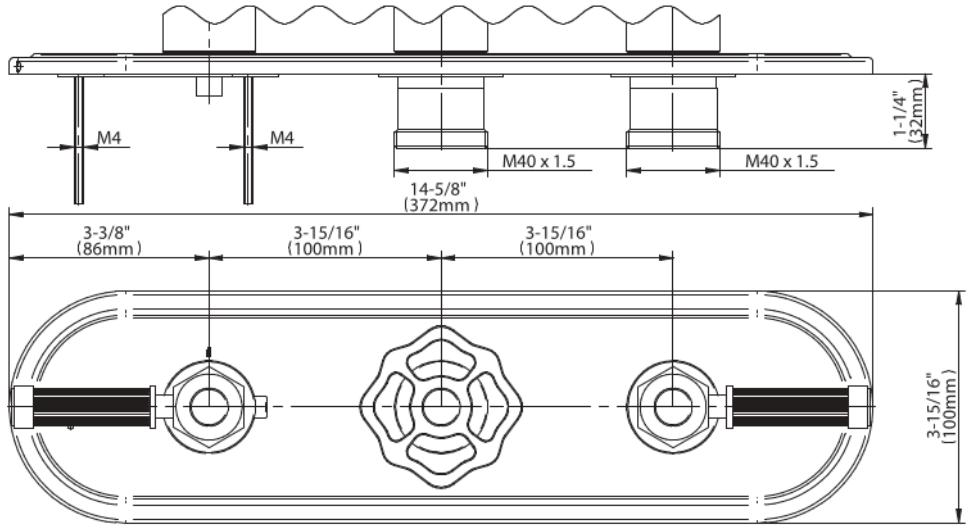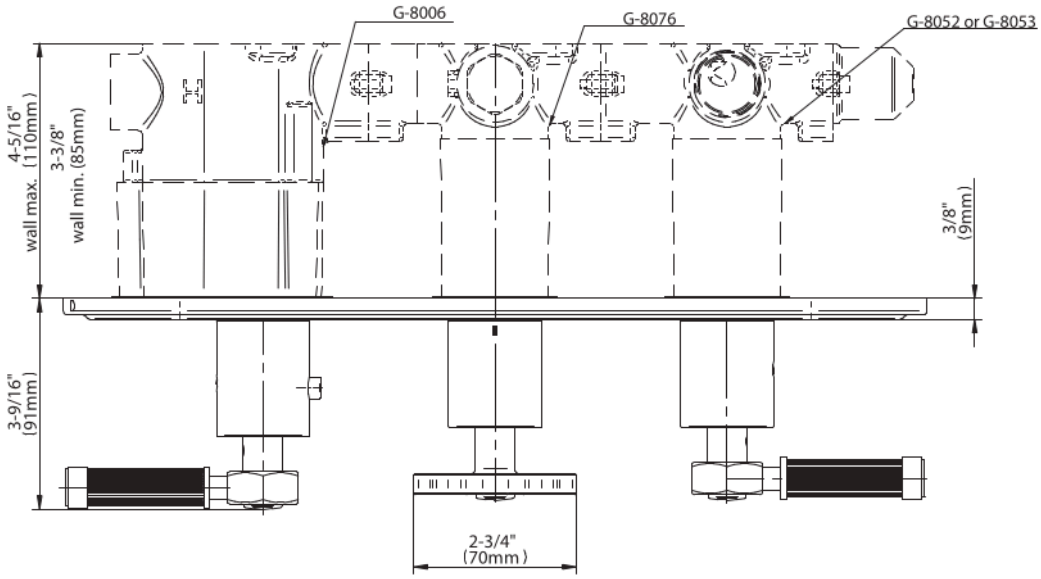
Vintage Collection
G-8087H-ALM56C18-T
Vintage M-Series Valve Horizontal Trim with Three Handles