Camden Collection
G-8087H-ALM48C16-T
M-Series Valve Horizontal Trim with Three Handles

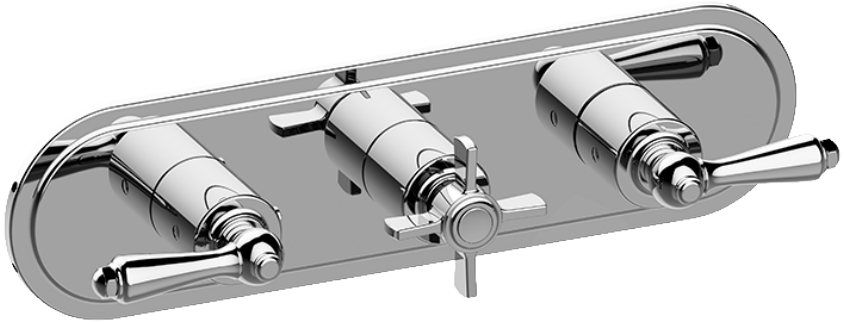

Product Features

- Three metal handles, decorative trim plate
- Use with M-Series rough valves
- ALM48C16 handles should not be used with any 3-way diverter valves

Code compliance

- ADA

Available Finishes
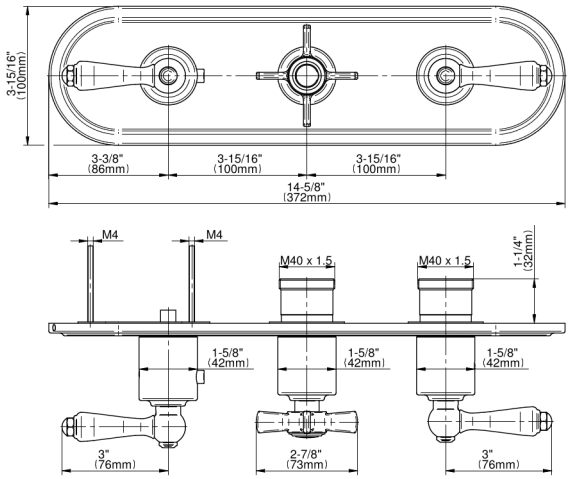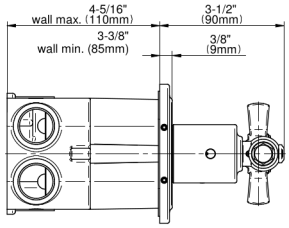
Camden Collection
G-8087H-ALM48C16-T
M-Series Valve Horizontal Trim with Three Handles