Vintage Collection
G-8086-LM56E0-T
Vintage M-Series Valve Trim with Two Handles

Product Features

- Two metal handles
- Decorative trim plate
- Use with M-Series rough valves
- LM56E0 handles should not be used with 3-way diverter valves
- To complete package, you must order G-8006 Rough Valve + 1 other Rough Valve

Code compliance

- ADA

Available Finishes

Polished Chrome
Matte White
Polished Nickel
Polished Nickel PVD®
Steelnox® (Satin Nickel)
Brushed Nickel
Brushed Nickel PVD®
Polished Champagne PVD®
Brushed Champagne PVD®
Polished Gold PVD®
Brushed Gold PVD®
Polished Brass PVD®
Brushed Brass PVD®
24K Polished Gold
24K Brushed Gold
Unfinished Brass
Unfinished Brushed Brass
Satin Gold PVD®
Warm Bronze PVD®
Polished Rose Gold / Polished Copper PVD®
Brushed Rose Gold / Brushed Copper PVD®
Polished Tuscan Bronze PVD®
Brushed Tuscan Bronze PVD®
Vintage Brushed Brass
Olive Bronze
Gunmetal PVD®
Onyx PVD®
Brushed Onyx PVD®
24K Brushed Gold / Architectural Black Accents
Polished Chrome / Architectural Black Accents
Polished Nickel / Architectural Black Accents
Architectural Black™
Matte Black
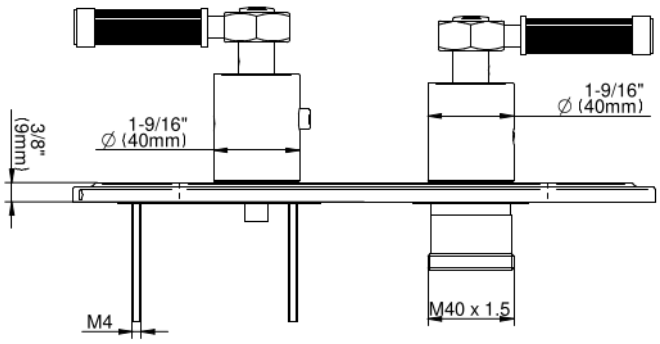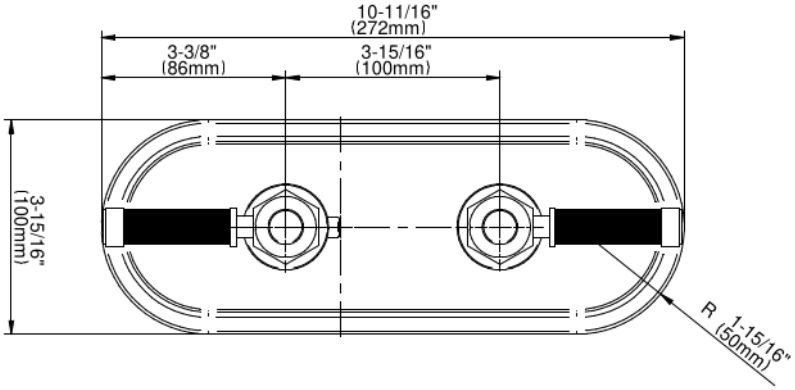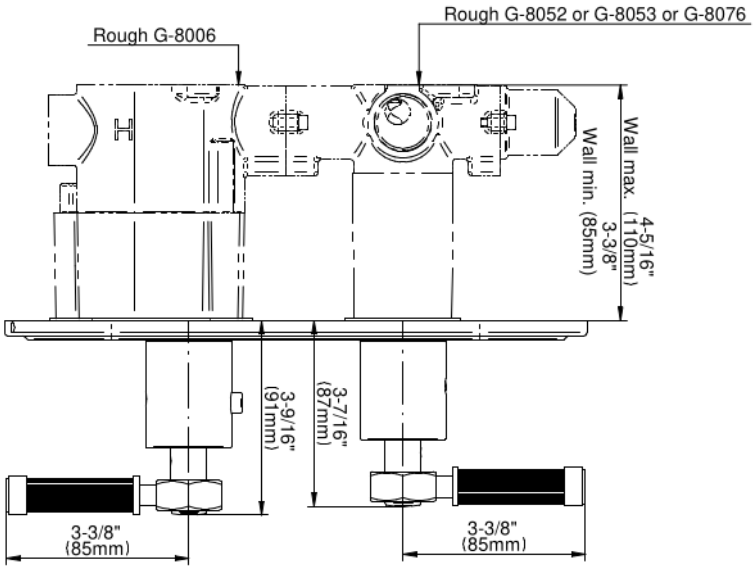
Vintage Collection
G-8086-LM56E0-T
Vintage M-Series Valve Trim with Two Handles