Finezza Collection
G-8073-LM47E1-T
Finezza UNO Two-Way Diverter Valve Trim Plate and Handle

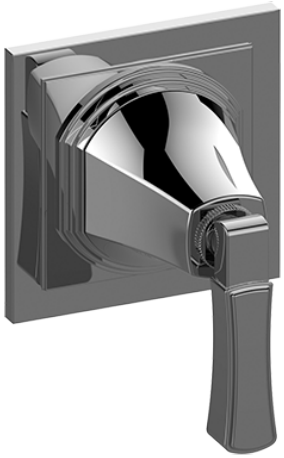

Product Features

- Single metal handle
- Decorative trim plate
- Use with G-8052 2-way diverter (pass through) control rough valve WITH off function
- To complete package, you must order rough valve

Code compliance

- ADA

Available Finishes
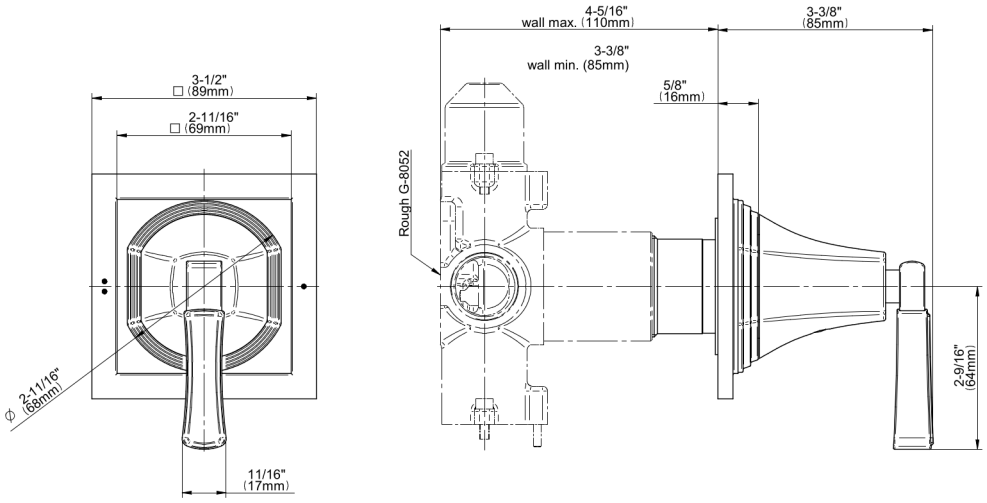
Finezza Collection
G-8073-LM47E1-T
Finezza UNO Two-Way Diverter Valve Trim Plate and Handle