**G-8069-LM46E1-T**

Terra M-Series 3-Way Diverter Valve Trim with Handle

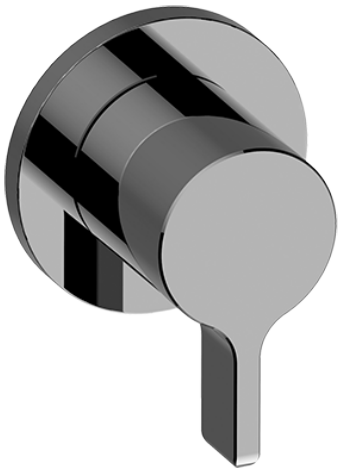

## Product Features

- Single metal handle
- Decorative trim plate
- Use with G-8053 3-way diverter control valve WITH off function (no pass-through)
- To complete package, you must order rough valve

## Code compliance

- ADA

## Available Finishes

Polished Chrome
Matte White
Polished Nickel
Polished Nickel PVD®
Steelnox® (Satin Nickel)
Brushed Nickel
Brushed Nickel PVD®
Polished Champagne PVD®
Brushed Champagne PVD®
Polished Gold PVD®
Brushed Gold PVD®
Polished Brass PVD®
Brushed Brass PVD®
24K Polished Gold
24K Brushed Gold
Unfinished Brass
Unfinished Brushed Brass
Satin Gold PVD®
Warm Bronze PVD®
Polished Rose Gold / Polished Copper PVD®
Brushed Rose Gold / Brushed Copper PVD®
Polished Tuscan Bronze PVD®
Brushed Tuscan Bronze PVD®
Vintage Brushed Brass
Olive Bronze
Gunmetal PVD®
Onyx PVD®
Brushed Onyx PVD®
Polished Nickel / Matte Black Accents
Architectural Black™
Brushed Gold 24K / Matte Black
Matte Black
Polished Chrome / Matte Black Accents
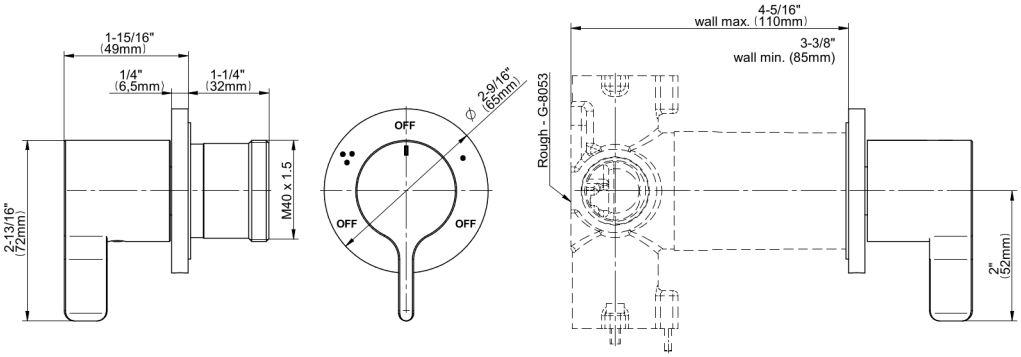
**G-8069-LM46E1-T**
Terra M-Series 3-Way Diverter Valve Trim with Handle