Adley Collection
G-8060-LC1S-T
Adley Diverter Valve Trim Plate and Handle

Product Features

- Single metal lever handle
- Decorative trim plate WITH off function
- To complete package, you must order G-8050 3-way PBV diverter rough valve

Code compliance

- ADA

Available Finishes
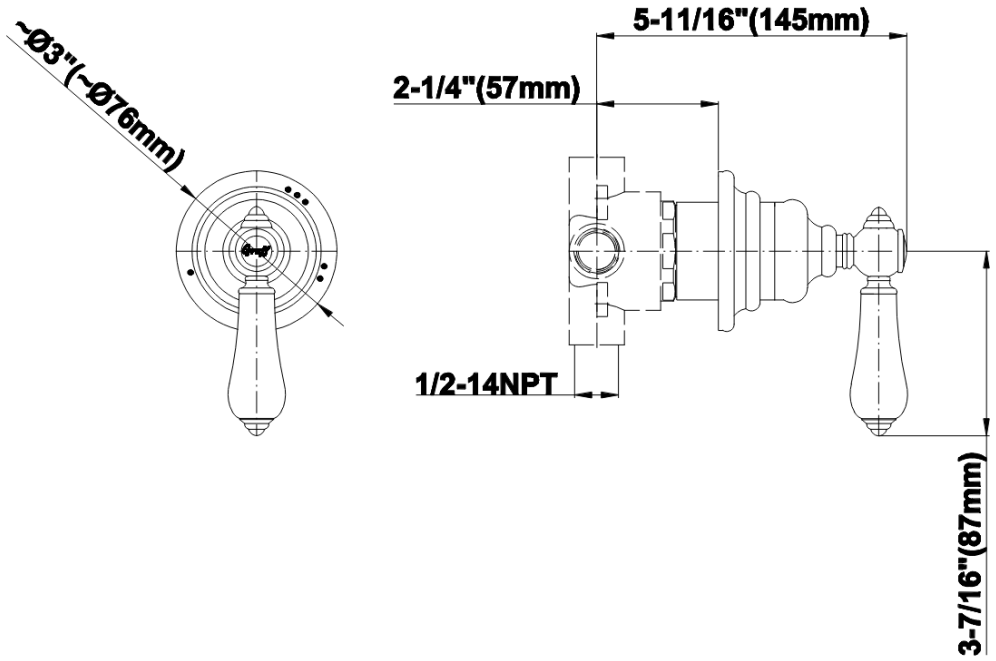
Adley Collection
G-8060-LC1S-T
Adley Diverter Valve Trim Plate and Handle