Topaz Collection
G-8034-LM63E1-T
Topaz M-Series Stop/Volume Control Valve Trim with Handle

Product Features

- Single metal handle
- Decorative trim plate
- Use with G-8076 Stop/Volume Control Rough Valve with Pass-Through or G-8077 Stop/Volume Control Rough Valve
- Note: To complete package, you must order Rough Valve

Available Finishes

Topaz Collection
G-8034-LM63E1-T
Topaz M-Series Stop/Volume Control Valve Trim with Handle

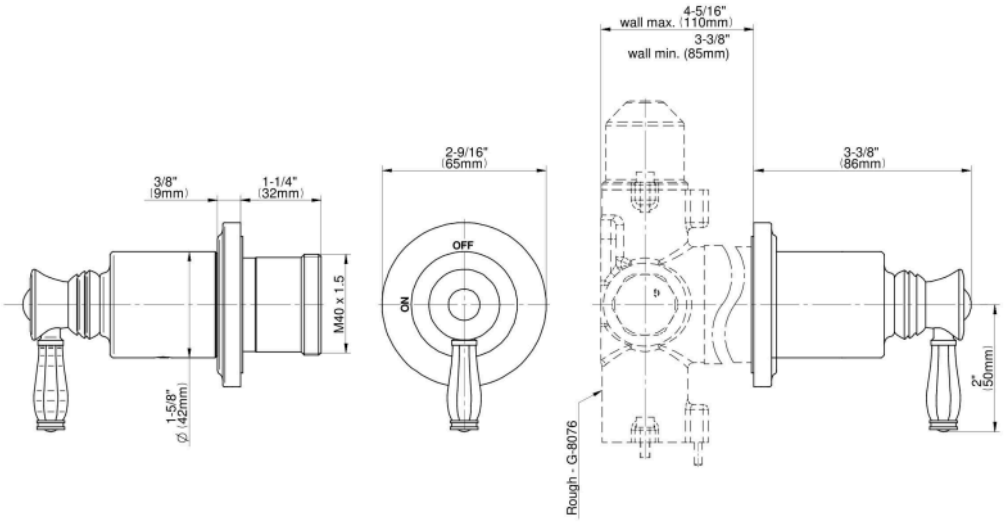

GRAFF
Art of Bath