Camden Collection
G-8034-C16E1-T
M-Series Stop/Volume Control Valve Trim with Handle

Product Features

- Single metal handle and decorative trim plate
- Use with G-8076 Stop/Volume Control rough valve with Pass-Through or G-8077 Stop/Volume Control rough valve

Code compliance

- ADA

Available Finishes
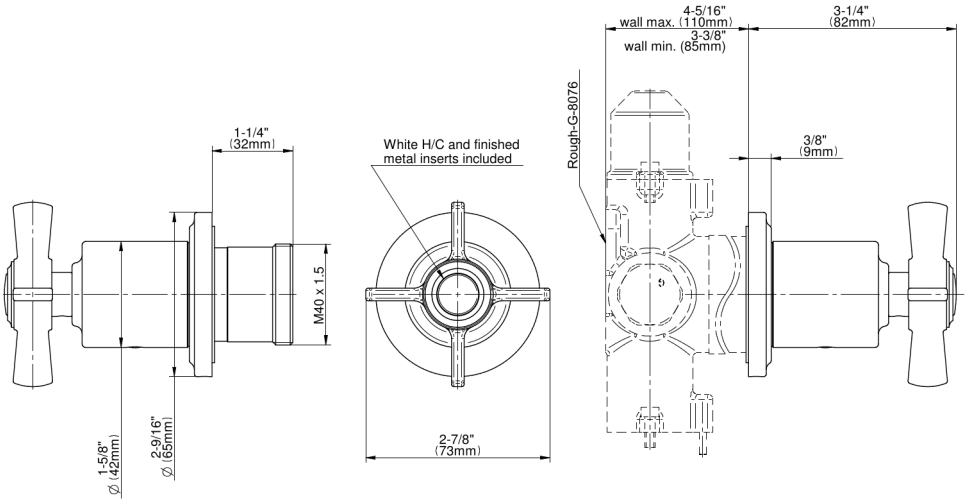
Camden Collection
G-8034-C16E1-T
M-Series Stop/Volume Control Valve Trim with Handle