M-Series Shower Collection
G-8028-SH1-T
Transitional M-Series 2-Way Diverter Valve Trim with Handle

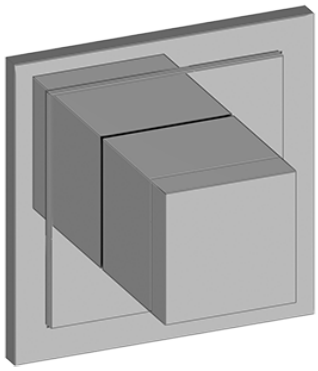

Product Features

- Single metal handle
- Decorative trim plate
- To complete package, you must order G-8052 2-way diverter volume control valve with off function and pass-through

Available Finishes
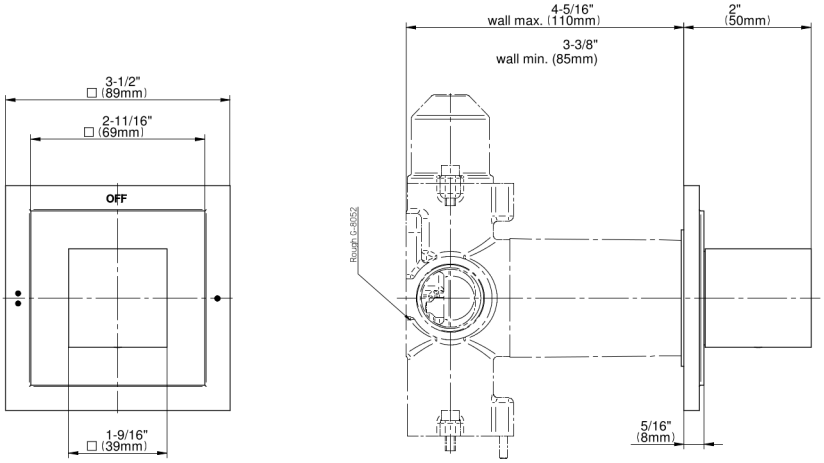
M-Series Shower Collection
G-8028-SH1-T
Transitional M-Series 2-Way Diverter Valve Trim with Handle