Camden Collection
G-6936-LM48W-T
Camden Wall-Mounted Lavatory Faucet w/Single Handle

Product Features

- Wall-mount spout and handle installation
- Aerated flow rate ? 1.2 max gpm
- 8-7/8" spout reach
- Handle may be installed on left or right of spout
- Drain assembly not included
- Optional extension kit
- Optional matching decorative trap

Code compliance

- ADA
- CALGreen

Available Finishes

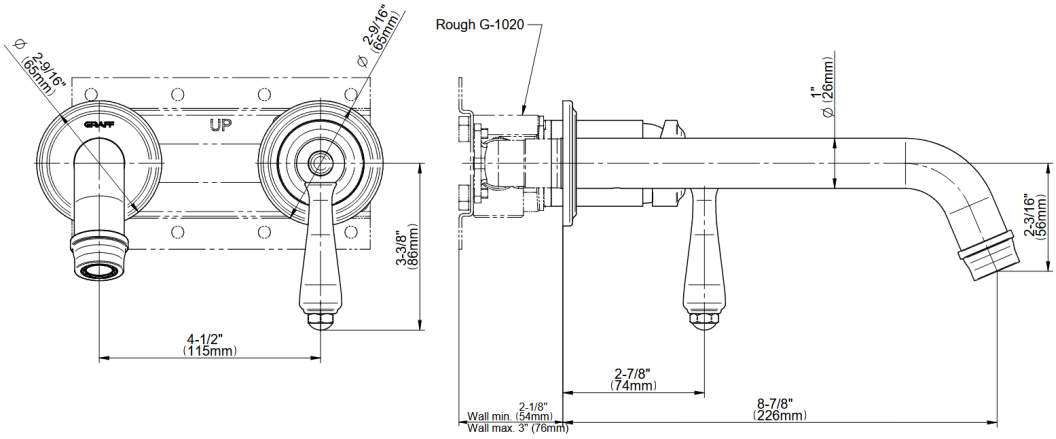

The measurements shown are for reference only. Products and specifications shown are subject to change without notice. Revised 09/2023
www.graff-designs.com | phone: 800-954-4723