Finezza Collection
**G-6852-C15B-T**
Finezza DUE Roman Tub

## Product Features

- Aerated flow rate ~7 gpm @45 psi
- Matching deck-mounted handshower & diverter set available

## Available Finishes

| | | | | | | | | | |
|---|---|---|---|---|---|---|---|---|---|
| Polished Chrome | Matte White | Polished Nickel | Polished Nickel PVD® | Steelnox® (Satin Nickel) | Brushed Nickel | Brushed Nickel PVD® | Polished Champagne PVD® | Brushed Champagne PVD® | Polished Gold PVD® |
| Brushed Gold PVD® | Polished Brass PVD® | Brushed Brass PVD® | 24K Polished Gold | 24K Brushed Gold | Unfinished Brass | Unfinished Brushed Brass | Satin Gold PVD® | Warm Bronze PVD® | Polished Rose Gold / Polished Copper PVD® |
| Brushed Rose Gold / Brushed Copper PVD® | Polished Tuscan Bronze PVD® | Brushed Tuscan Bronze PVD® | Vintage Brushed Brass | Olive Bronze | Gunmetal PVD® | Onyx PVD® | Brushed Onyx PVD® | Architectural Black™ | Matte Black |
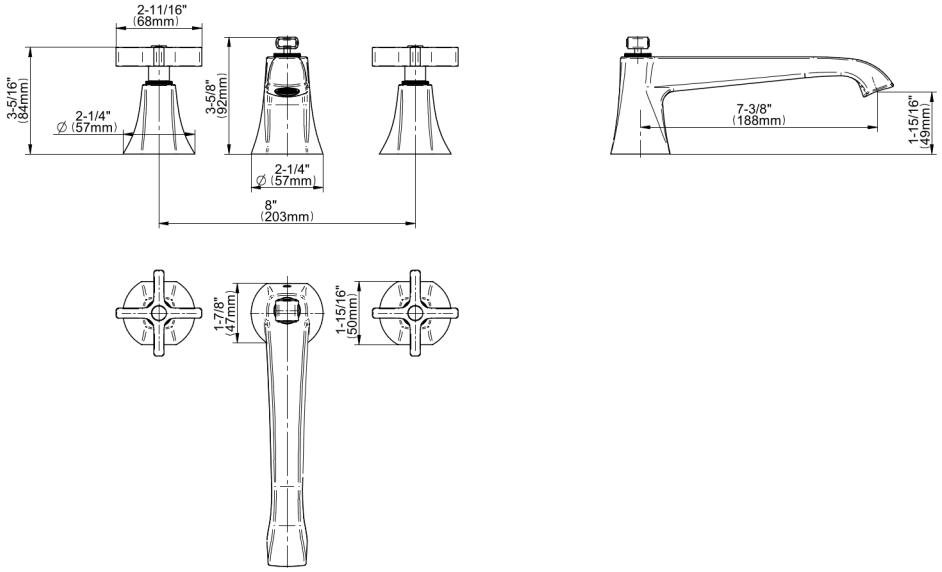
Finezza Collection
**G-6852-C15B-T**
Finezza DUE Roman Tub