Finezza Collection
**G-6851-C15B**
Finezza UNO Roman Tub Set

## Product Features

- Aerated flow rate ~7 gpm @45 psi
- Deck-mounted handshower and diverter set included
- Optional in-line pressure balancing valve

## Code compliance

- ADA

## Available Finishes
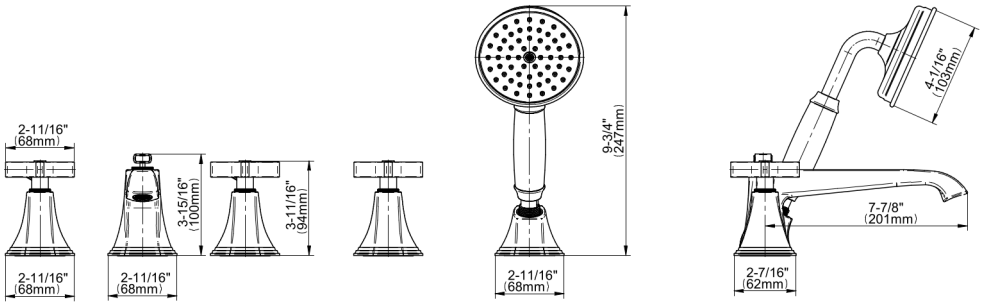
Finezza Collection
**G-6851-C15B**
Finezza UNO Roman Tub Set