Finezza Collection
G-6800-LM47
Finezza UNO Lavatory Faucet

Product Features

- Single-hole installation
- Aerated flow rate ?1.2 max gpm
- 1-1/4" hole cutout
- Includes push-top umbrella pop-up drain w/overflow
- Optional matching decorative trap G-9970

Code compliance

- ADA
- CALGreen

Available Finishes
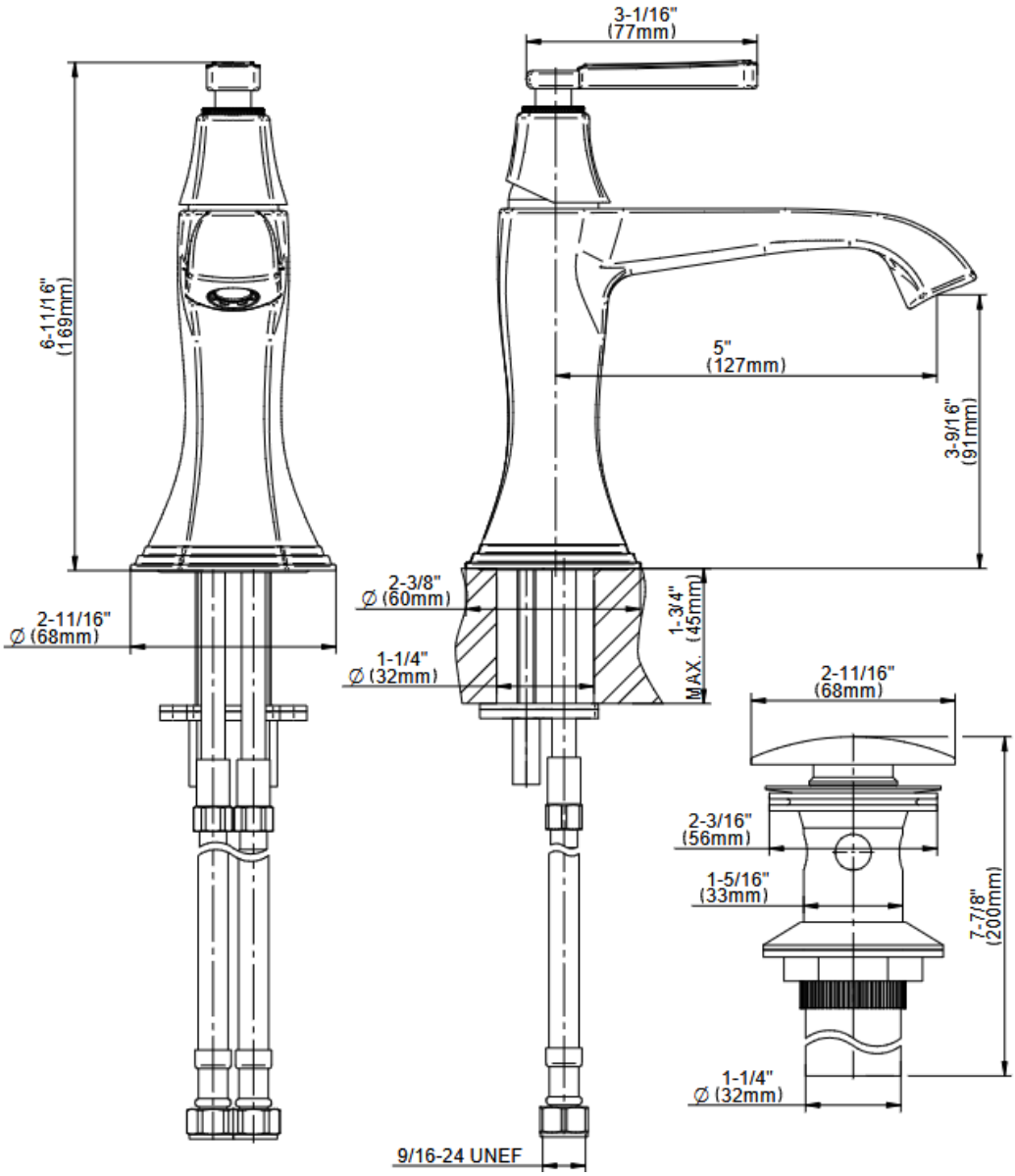
Finezza Collection
G-6800-LM47
Finezza UNO Lavatory Faucet