Terra Collection
G-6751-LM46B
Roman Tub Set (Rough and Trim)

Product Features

- Aerated flow rate 13 gpm @60 psi
- Handshower flow rate ?1.5 max gpm
- Deck-mounted handshower and diverter set included
- Optional in-line pressure balancing valve

Code compliance

- ADA

Available Finishes

Polished Chrome
Matte White
Polished Nickel
Polished Nickel PVD®
Steelnox® (Satin Nickel)
Brushed Nickel
Brushed Nickel PVD®
Polished Champagne PVD®
Brushed Champagne PVD®
Polished Gold PVD®
Brushed Gold PVD®
Polished Brass PVD®
Brushed Brass PVD®
24K Polished Gold
24K Brushed Gold
Unfinished Brass
Unfinished Brushed Brass
Satin Gold PVD®
Warm Bronze PVD®
Polished Rose Gold / Polished Copper PVD®
Brushed Rose Gold / Brushed Copper PVD®
Polished Tuscan Bronze PVD®
Brushed Tuscan Bronze PVD®
Vintage Brushed Brass
Olive Bronze
Gunmetal PVD®
Onyx PVD®
Brushed Onyx PVD®
Polished Nickel / Matte Black Accents
Architectural Black™
Brushed Gold 24K / Matte Black
Matte Black
Polished Chrome / Matte Black Accents
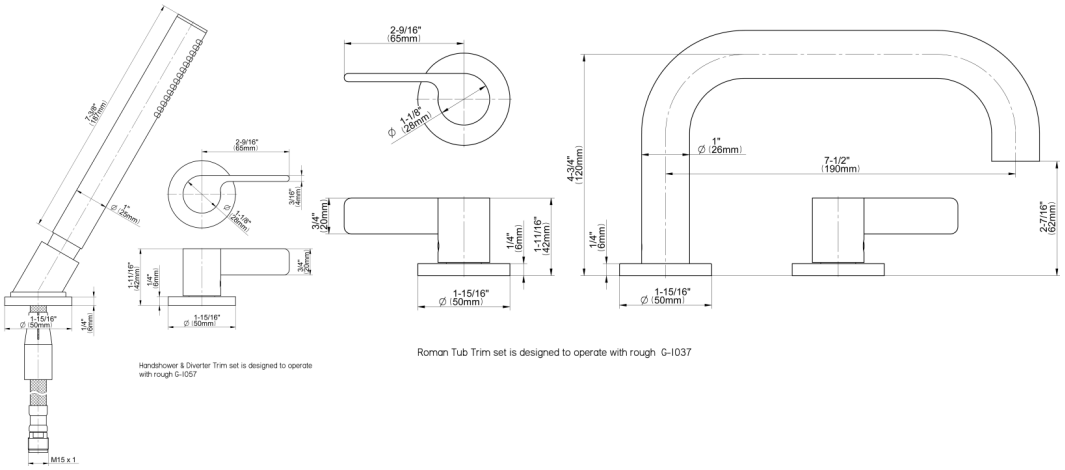
Terra Collection
G-6751-LM46B
Roman Tub Set (Rough and Trim)