Terra Collection
G-6731-LM46B-T
Terra Wall-Mounted Lavatory Faucet (Trim)

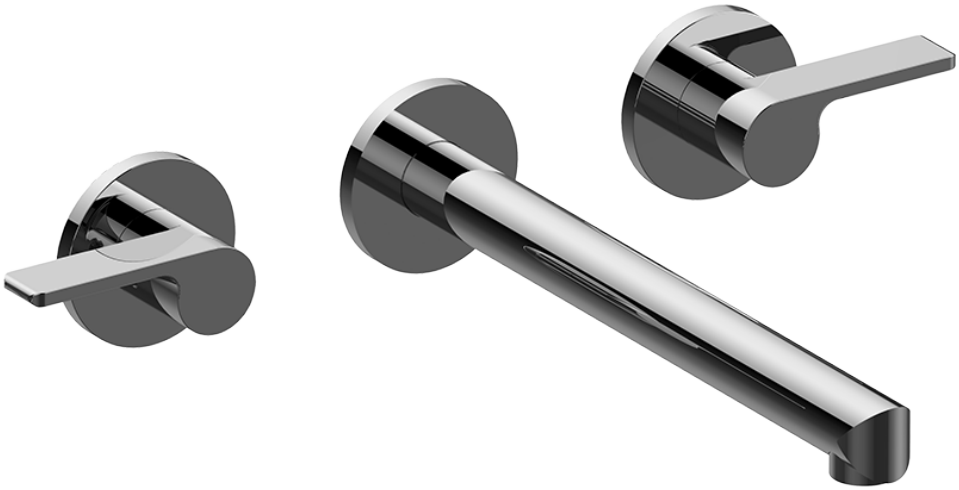

Product Features

- Wall-mount spout and handle installation
- Aerated flow rate ?1.2 max gpm
- 8-1/2" to 9-1/4" spout reach
- Drain assembly not included
- Optional matching decorative trap G-9970
- To complete package, you must order Rough Valve

Code compliance

- ADA
- CALGreen

Available Finishes

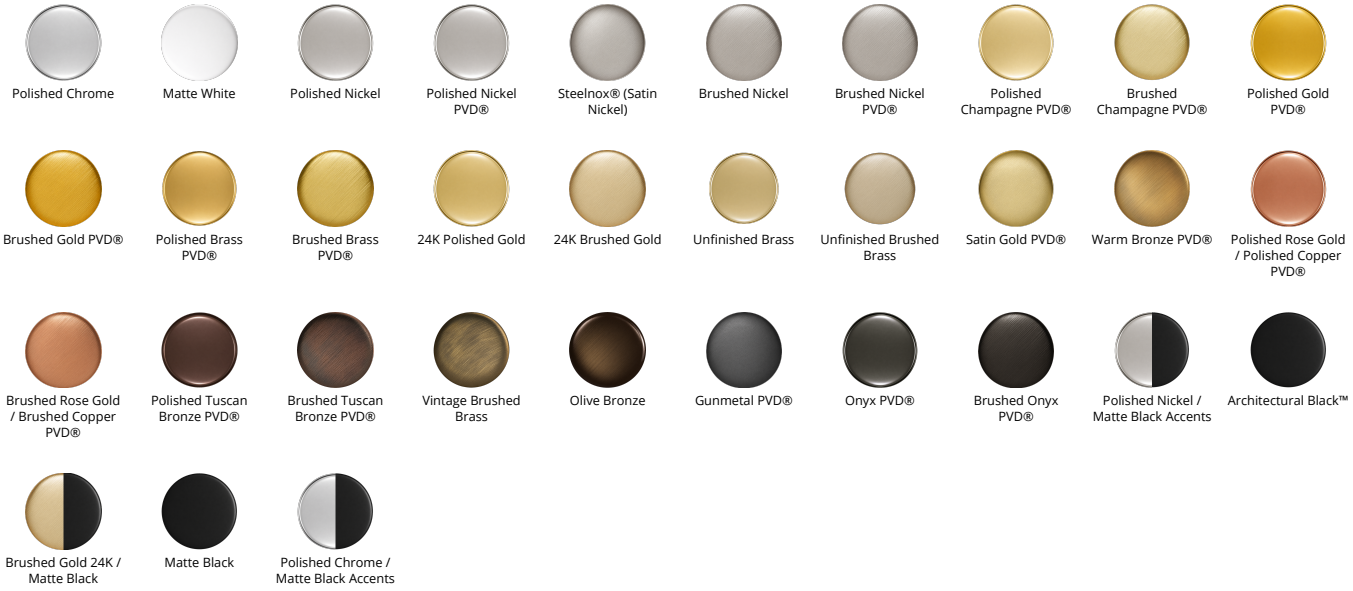
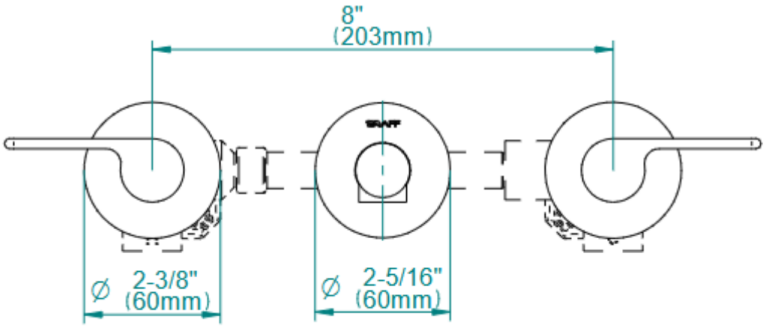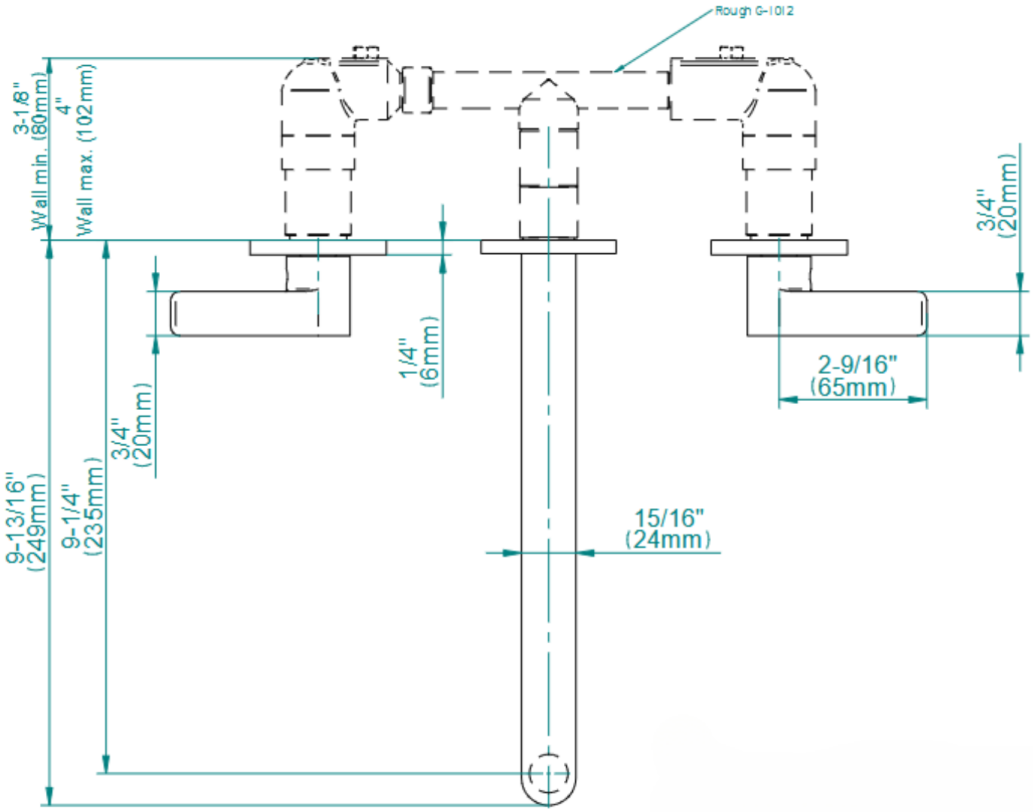
Terra Collection
G-6731-LM46B-T
Terra Wall-Mounted Lavatory Faucet (Trim)