Terra Collection
G-6710-LM62B
Terra Widespread Lavatory Faucet

Product Features

- Installs on 8” centers
- Aerated flow rate ?1.2 max gpm
- 1-3/16” hole cutout (x3)
- Includes pop-up drain assembly with lift rod and overflow
- Optional matching decorative trap G-9970

Code compliance

- ADA
- CALGreen

Available Finishes

Polished Chrome
Matte White
Polished Nickel
Polished Nickel PVD®
Steelnox® (Satin Nickel)
Brushed Nickel
Brushed Nickel PVD®
Polished Champagne PVD®
Brushed Champagne PVD®
Polished Gold PVD®
Brushed Gold PVD®
Polished Brass PVD®
Brushed Brass PVD®
24K Polished Gold
24K Brushed Gold
Unfinished Brass
Unfinished Brushed Brass
Satin Gold PVD®
Warm Bronze PVD®
Polished Rose Gold / Polished Copper PVD®
Brushed Rose Gold / Brushed Copper PVD®
Polished Tuscan Bronze PVD®
Brushed Tuscan Bronze PVD®
Vintage Brushed Brass
Olive Bronze
Gunmetal PVD®
Onyx PVD®
Brushed Onyx PVD®
Polished Nickel / Matte Black Accents
Architectural Black™
Brushed Gold 24K / Matte Black
Matte Black
Polished Chrome / Matte Black Accents

Terra Collection
G-6710-LM62B
Terra Widespread Lavatory Faucet
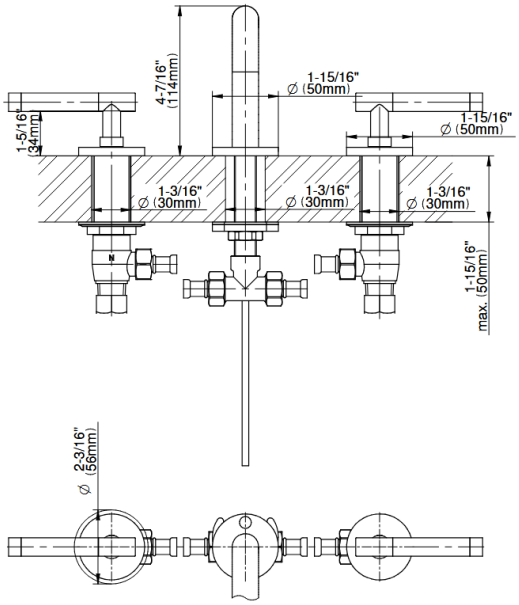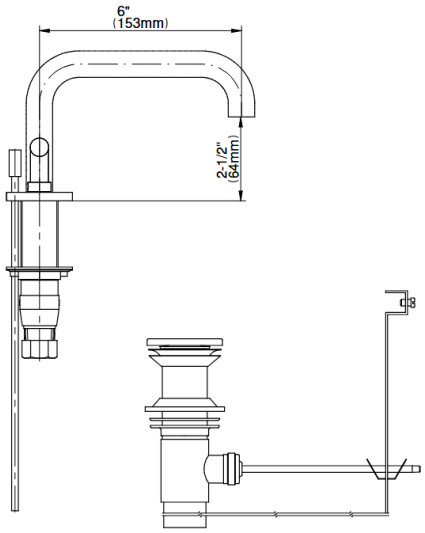
Terra Series