Harley Collection
G-6710-LM57B
Harley Widespread Lavatory Faucet (Trim)

Product Features

- Installs on 8” centers
- Aerated flow rate ?1.2 max gpm
- 1-3/16” hole cutout (x3)
- Includes pop-up drain assembly with lift rod and overflow
- Optional matching decorative trap G-9970

Code compliance

- ADA
- CALGreen

Available Finishes

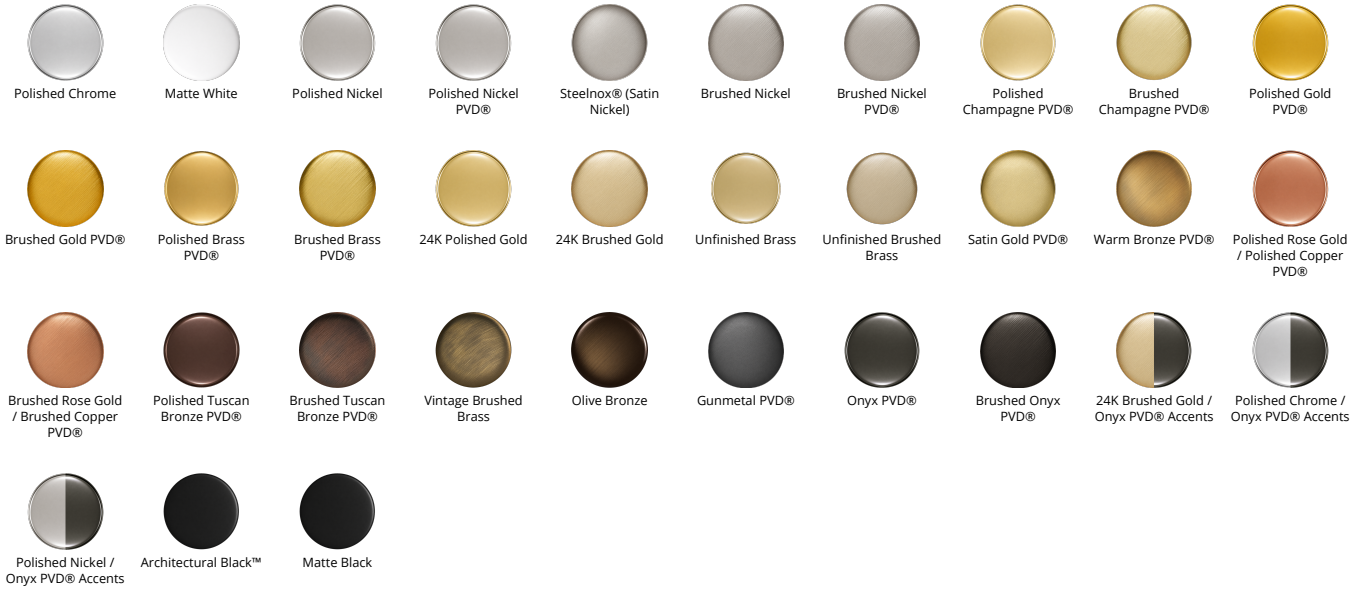
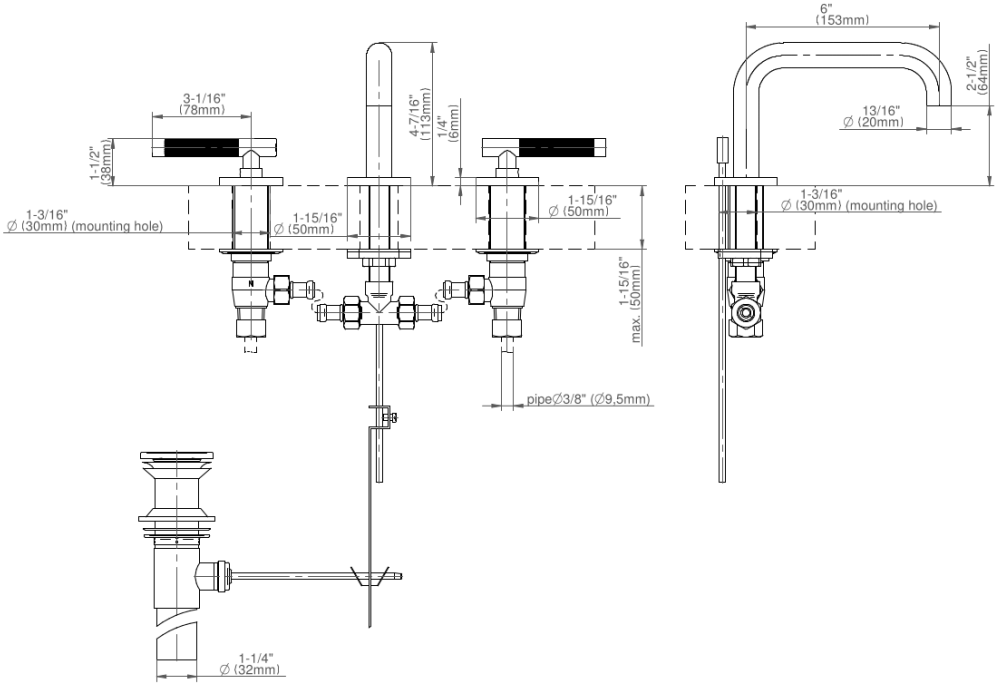
Harley Collection
G-6710-LM57B
Harley Widespread Lavatory Faucet (Trim)