Ametis Collection
G-6430-LM43-T
Ametis Wall-Mounted Lavatory Faucet (Trim)

Product Features

- Wall-mounted installation
- Aerated flow rate ?1.2 max gpm
- 6-7/8" spout projection
- Drain assembly not included
- Optional matching decorative trap G-9970
- To complete package, you must order Rough Valve

Code compliance

- ADA
- CALGreen

Available Finishes
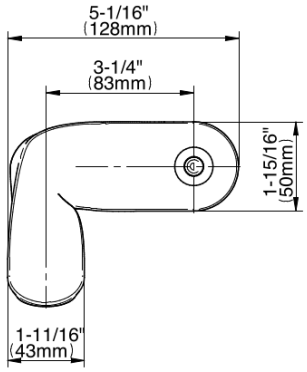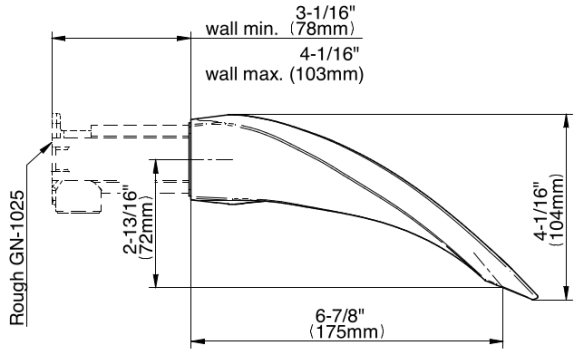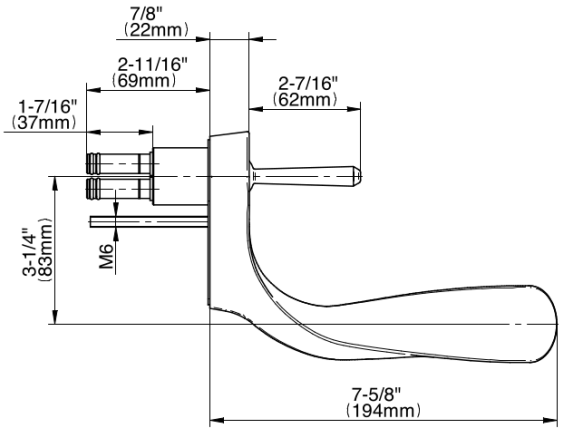
Ametis Collection
G-6430-LM43-T
Ametis Wall-Mounted Lavatory Faucet (Trim)