Sento Collection
G-6336-LM42W-T
Sento Wall-Mounted Lavatory Faucet with Single Handle (Trim)

Product Features

- Wall-mount spout and handle installation
- Aerated flow rate ?1.2 max gpm
- 9-1/4" spout reach
- Drain assembly not included
- Optional matching decorative trap G-9970
- Optional extension kit
- To complete package, you must order Rough Valve

Code compliance

- ADA
- CALGreen

Available Finishes
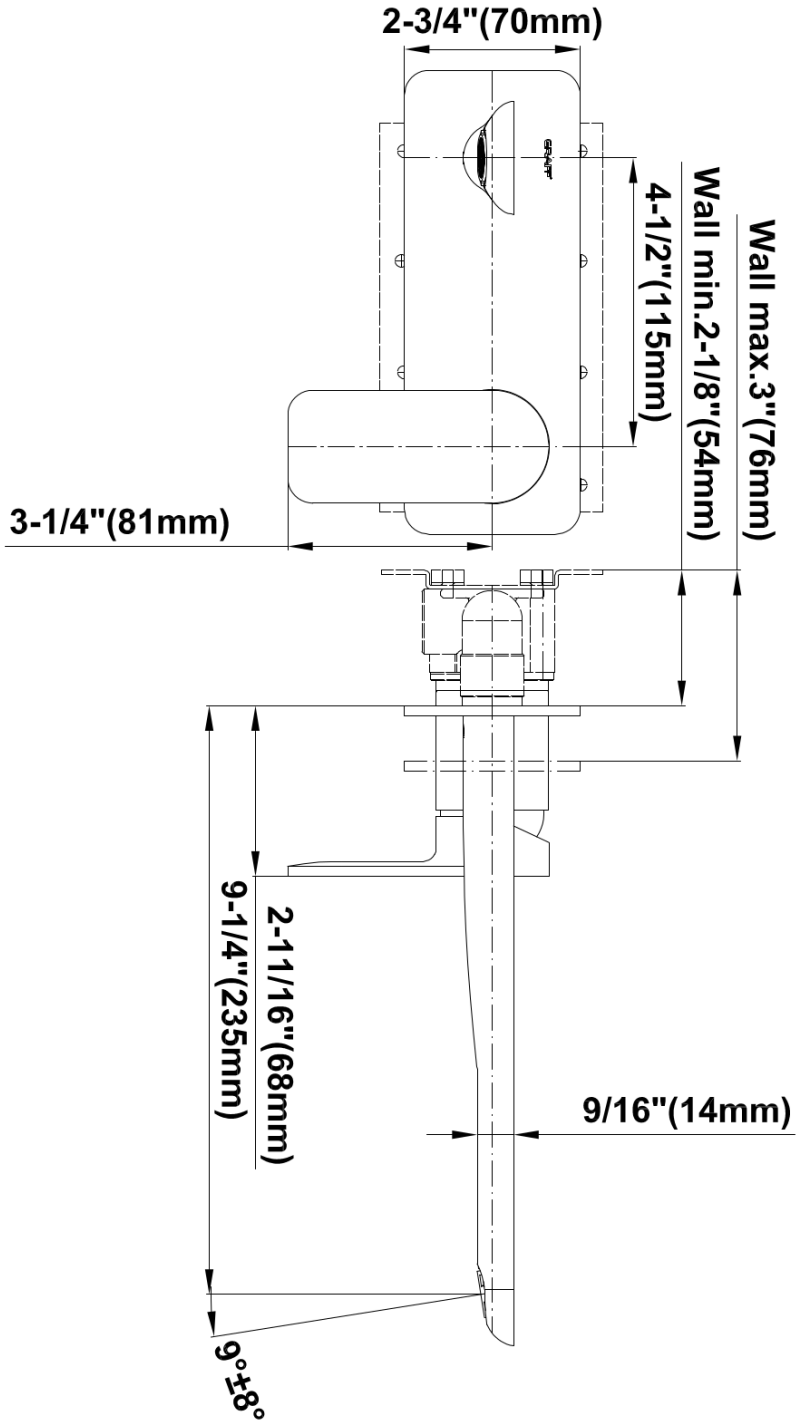
Sento Collection
G-6336-LM42W-T
Sento Wall-Mounted Lavatory Faucet with Single Handle (Trim)