M.E. Collection
G-6135-LM62MW-T
M.E. Wall Mounted Lavatory Faucet with Single Handle

Product Features

- Wall-mount spout and handle installation
- Aerated flow rate ?1.2 max gpm
- 7-3/8" spout reach
- Handle may be installed on left or right of spout
- Drain assembly not included
- Optional matching decorative trap G-9970
- Optional extension kit
- To complete package, you must order Rough Valve

Code compliance

- ADA
- CALGreen

Available Finishes

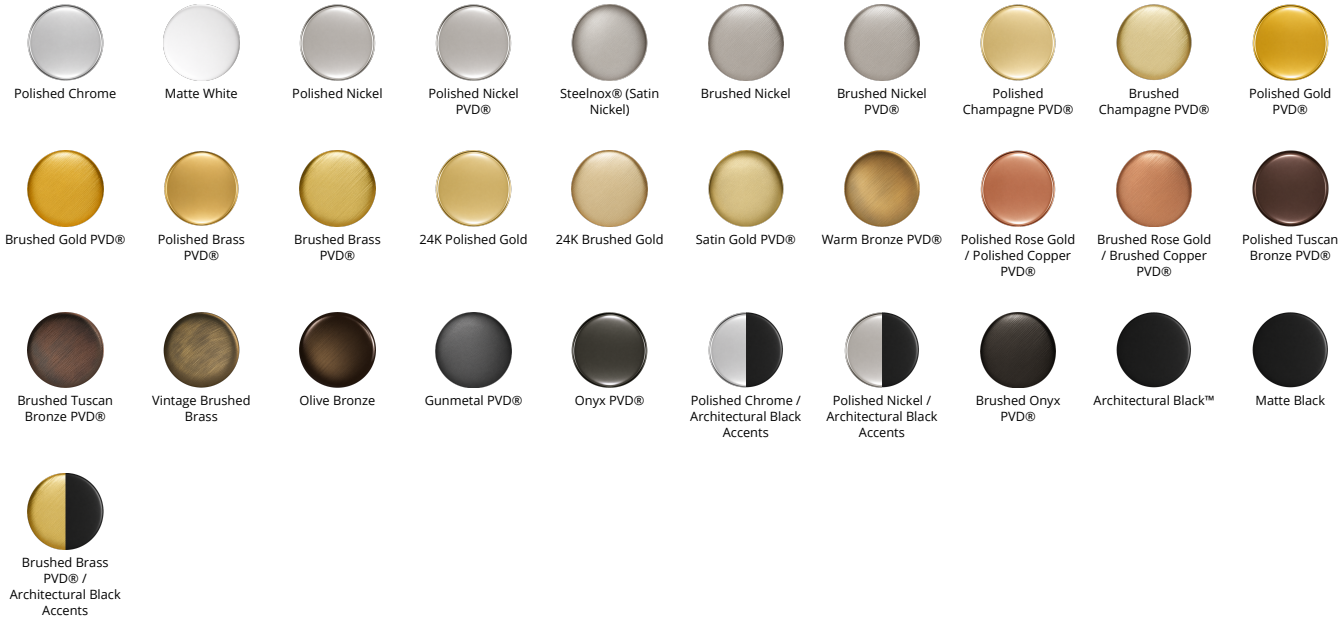

M.E. Collection
G-6135-LM62MW-T
M.E. Wall Mounted Lavatory Faucet with Single Handle

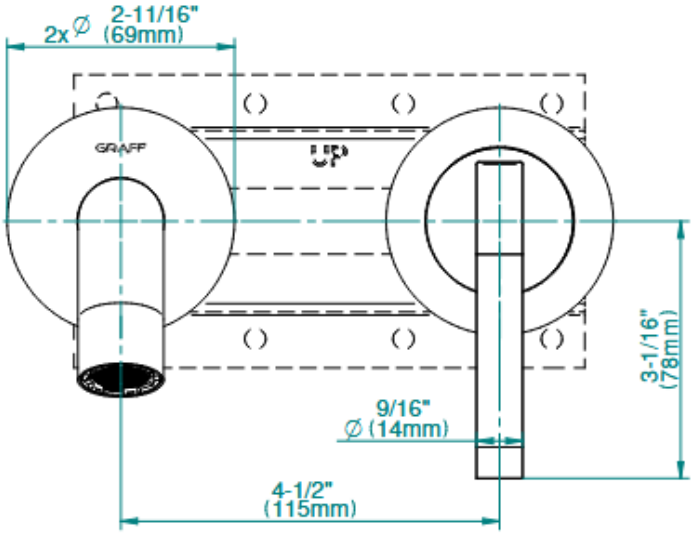

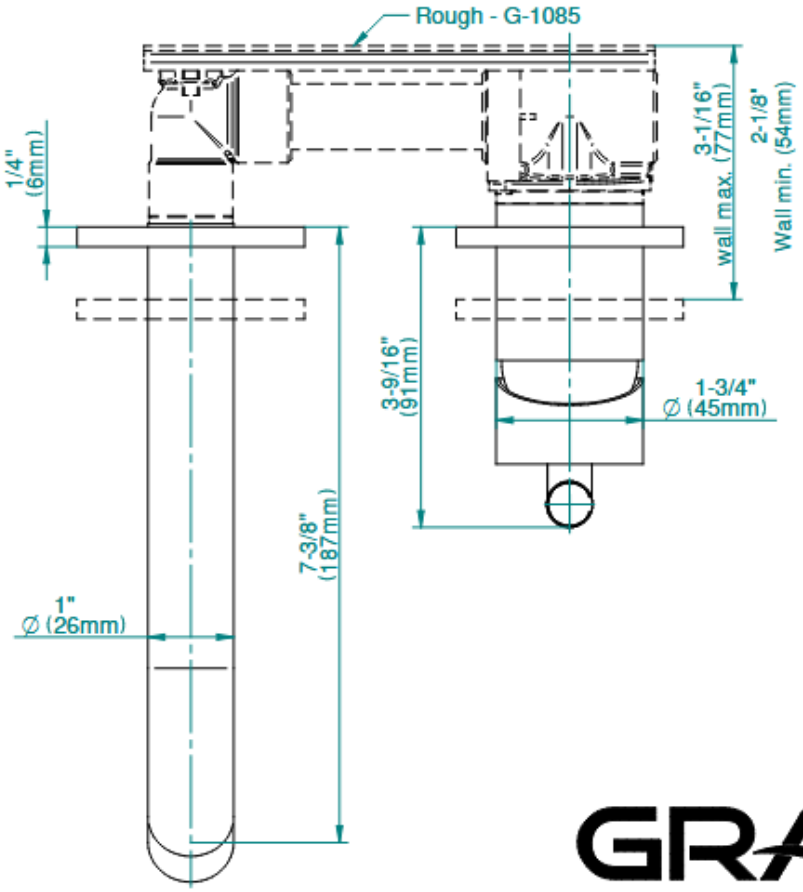

GRAFF
Art of Bath