Adley Collection
G-4840-LM34
Adley Bridge Kitchen Faucet

Product Features

- Installs on 8
- Swivel spout
- Aerated flow rate ? 1.8 max gpm
- Reverse Osmosis Compatible w/ Re-Mineralized System

Code compliance

- ADA
- CALGreen

Available Finishes

Polished Chrome
Matte White
Polished Nickel
Polished Nickel PVD®
Steelnox® (Satin Nickel)
Brushed Nickel
Brushed Nickel PVD®
Polished Champagne PVD®
Brushed Champagne PVD®
Polished Gold PVD®
Brushed Gold PVD®
Polished Brass PVD®
Brushed Brass PVD®
Satin Gold PVD®
Warm Bronze PVD®
Polished Rose Gold / Polished Copper PVD®
Brushed Rose Gold / Brushed Copper PVD®
Polished Tuscan Bronze PVD®
Brushed Tuscan Bronze PVD®
Vintage Brushed Brass
Olive Bronze
Gunmetal PVD®
Onyx PVD®
Brushed Onyx PVD®
Architectural Black™
Matte Black
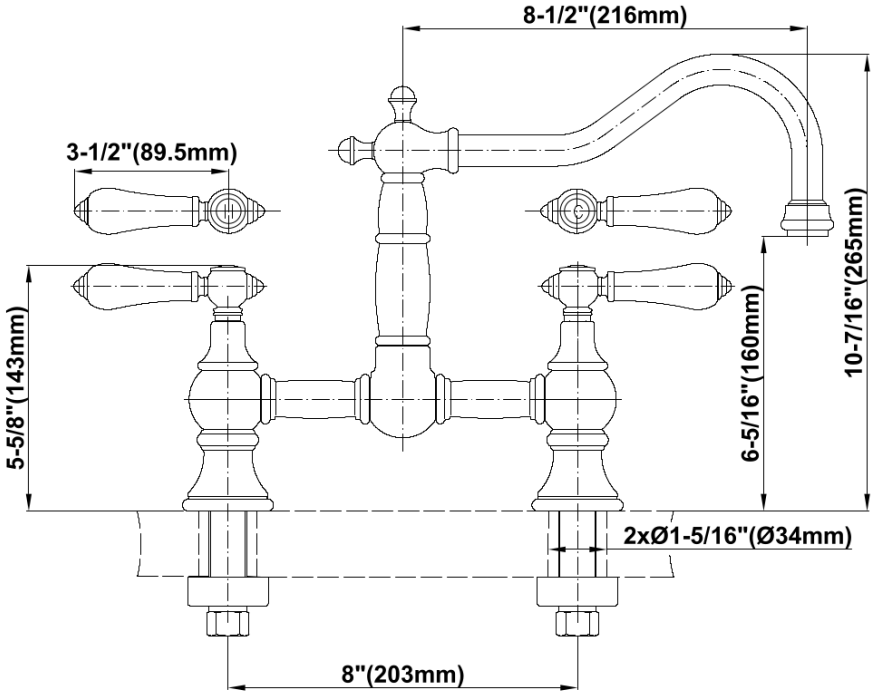
Adley Collection
G-4840-LM34
Adley Bridge Kitchen Faucet