M.E. 25 Collection
G-4615-LM41J
M.E "Cosmopolitan Edition" Pull-Down Kitchen Faucet

Product Features

- Single-hole installation
- Swivel spout
- Dual-function spray/stream pull-out sprayhead
- Aerated flow rate ? 1.8 max gpm
- Reverse Osmosis Compatible w/ Re-Mineralized System

Code compliance

- ADA
- CALGreen

Available Finishes
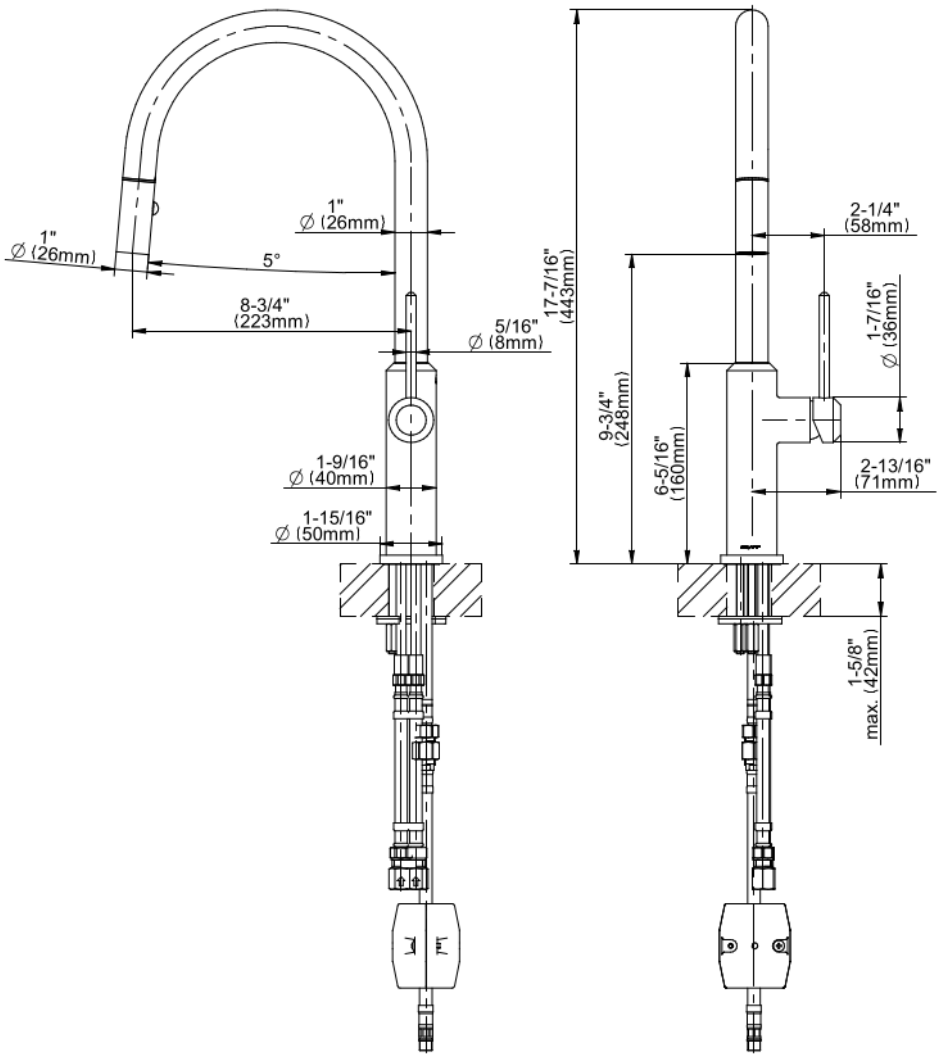
M.E. 25 Collection
G-4615-LM41J
M.E "Cosmopolitan Edition" Pull-Down Kitchen Faucet