Targa Collection
G-3651-C14B
Targa Roman Tub Set

Product Features

- 1 1/2" hole cutout (x4)
- Aerated Flow Rate ~7 gpm @45 psi
- Deck-Mounted Handshower and Integrated Diverter Set Included
- Optional in-line pressure balancing valve
- Handles are required to install rough

Available Finishes
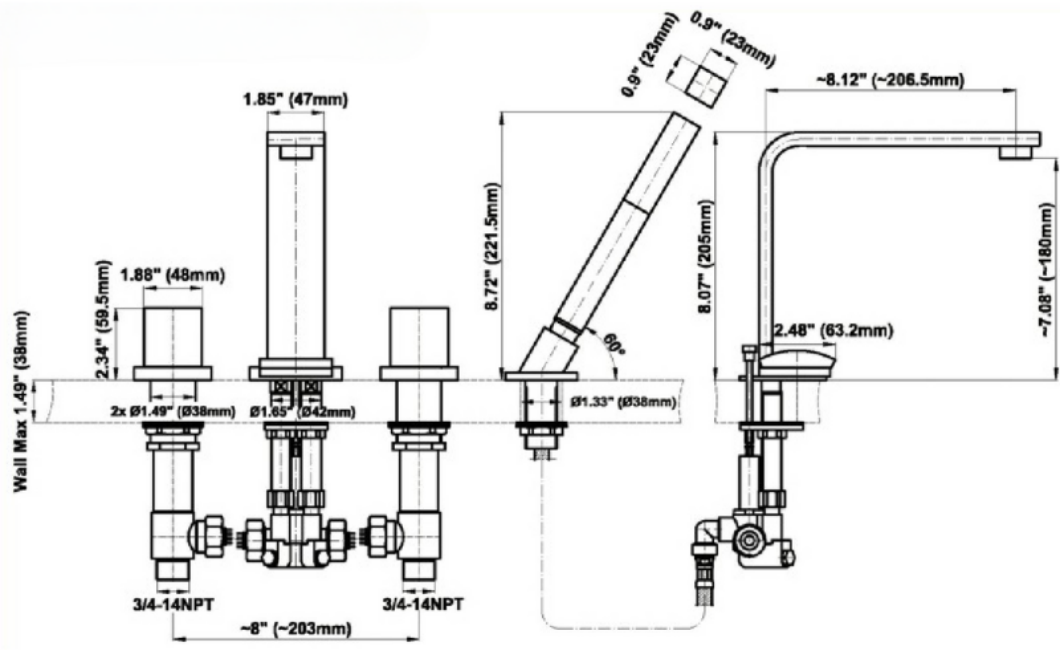
Targa Collection
G-3651-C14B
Targa Roman Tub Set