Targa Collection
G-3630-C14W
Targa Wall-Mounted Lavatory Faucet

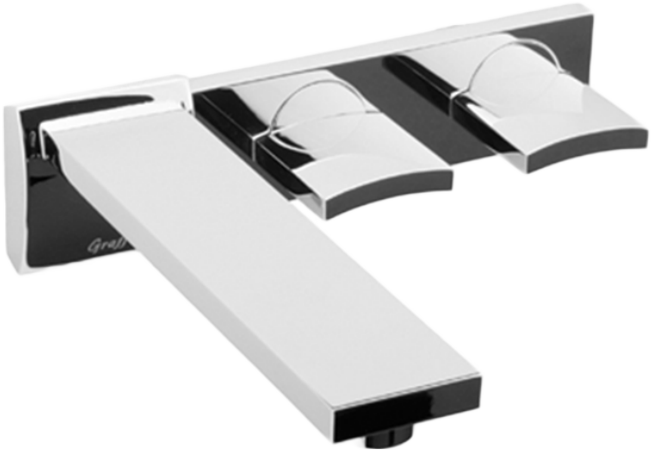

Product Features

- Wall-mount spout and handle installation
- Aerated flow rate ? 1.2 max gpm
- 7 7/8" Fixed Spout Reach
- Drain assembly not included
- Optional Matching Decorative Trap G-9971

Code compliance

- CALGreen

Available Finishes
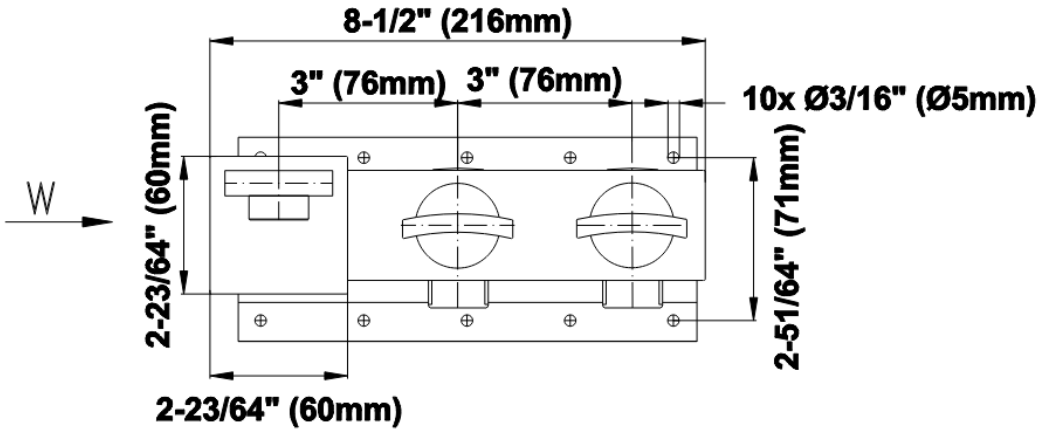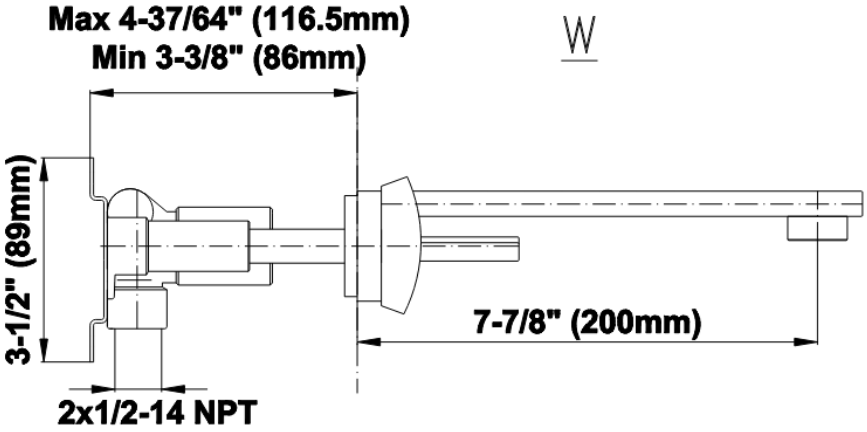
Targa Collection
G-3630-C14W
Targa Wall-Mounted Lavatory Faucet