G-3601-LM36
Targa Lavatory Faucet

Product Features

- Single-hole installation
- Aerated flow rate ? 1.2 max gpm
- Includes Push-Top Umbrella Pop-up Drain w/Overflow
- Optional Matching Decorative Trap G-9971

Code compliance

- ADA
- CALGreen

Available Finishes
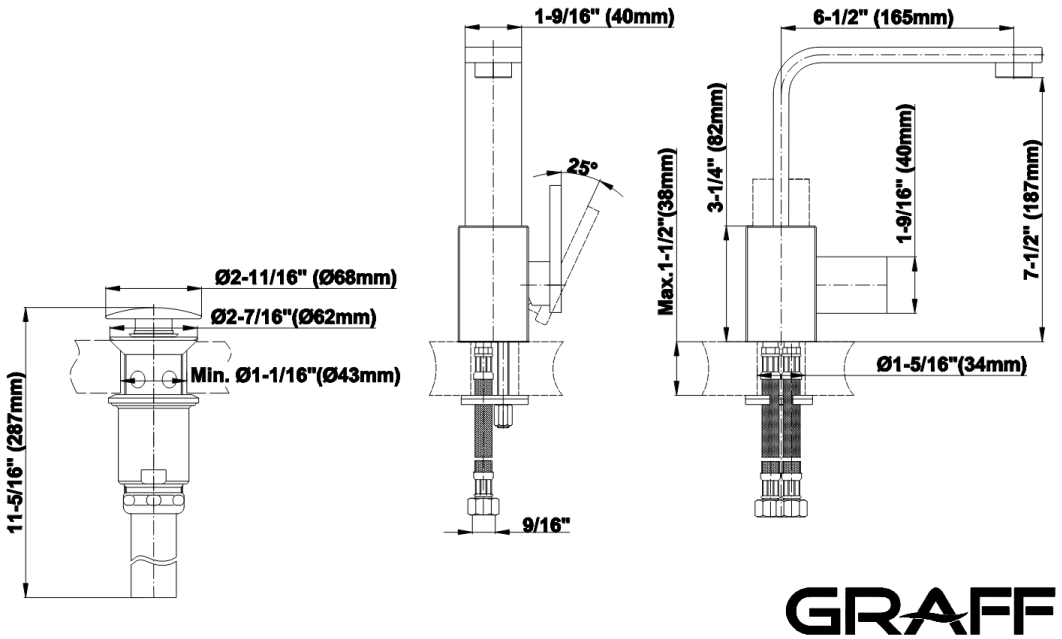
G-3601-LM36
Targa Lavatory Faucet