Adley Collection
G-2530-LC1-T
Adley Wall-Mounted Lavatory Faucet

Product Features

- Installs on 8
- Aerated flow rate ? 1.2 max gpm
- 7-1/2" spout reach
- Drain assembly not included
- Optional Matching Decorative Trap G-9973

Code compliance

- ADA
- CALGreen

Available Finishes
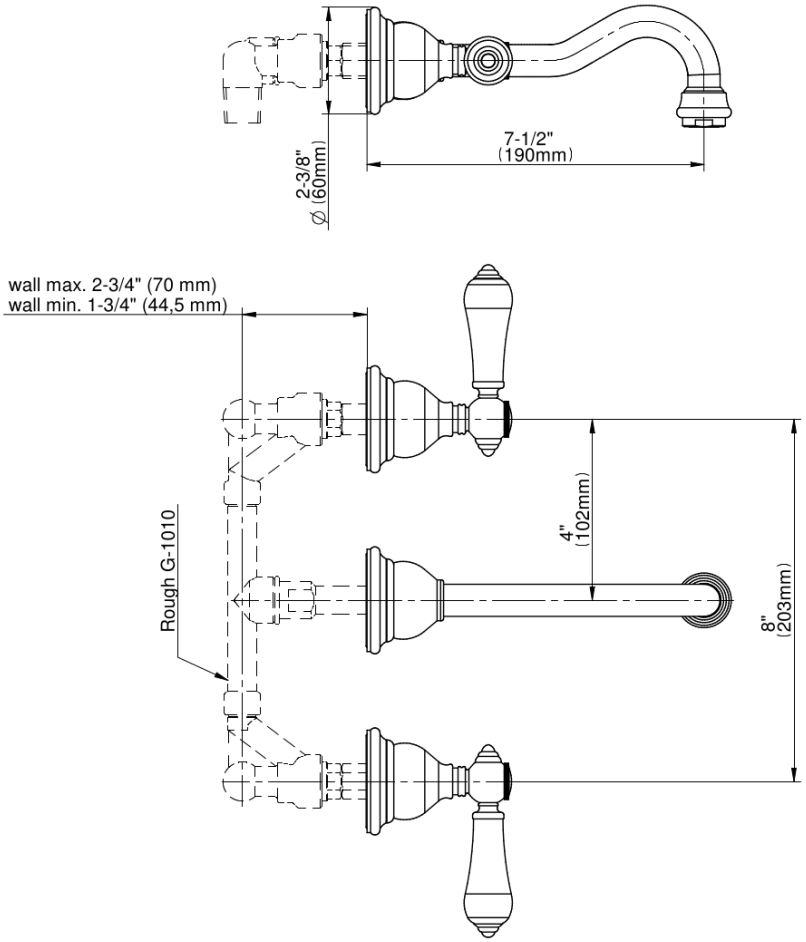
Adley Collection
G-2530-LC1-T
Adley Wall-Mounted Lavatory Faucet