Lauren Collection
G-2453-C21B
Lauren Roman Tub Set

Product Features

- 1 1/3” hole cutout (x5)
- Aerated spout flow rate ~7 gpm @ 45 psi
- Handshower flow rate ?1.5 max gpm
- Deck-mounted handshower and diverter set included
- Optional in-line pressure balancing valve

Available Finishes
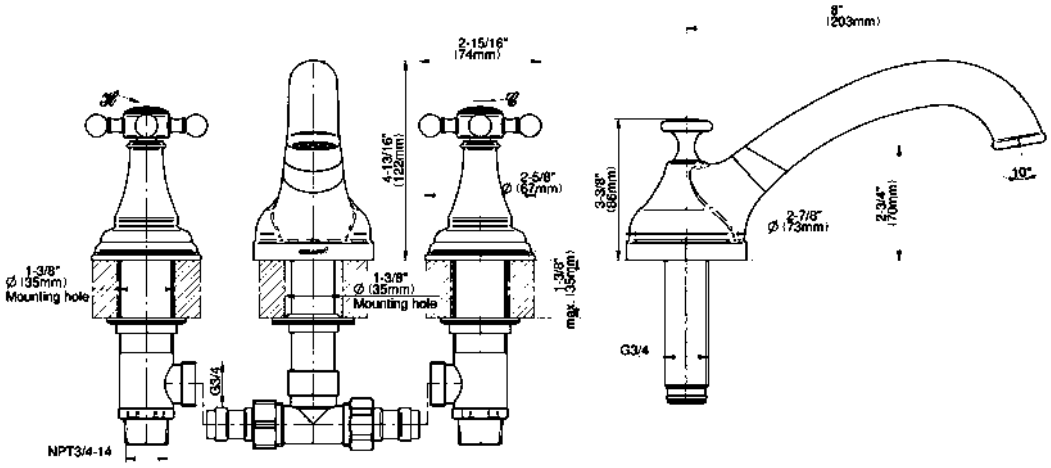
Lauren Collection
G-2453-C21B
Lauren Roman Tub Set